MINOLTA DYNAX 600si CLASSIC (2097–100)
MINOLTA DYNAX 600si CLASSIC DATE (2097–200)
MINOLTA MAXXUM 600si (2097–300)
MINOLTA α 507si (2097–600)
MINOLTA MAXXUM 650si PANORAMA DATE (2097–800)

TYPE

: 35mm SLR with microcomputer control of built–in flash, AE, and AF

LENS MOUNT

: Minolta A–type bayonet mount

SHUTTER

Type	: Electronically–controlled, vertical–traverse, focal–plane type
Range	: 1/4000 to 30 sec., bulb
Flash sync speed	: 1/200 sec. or slower (with 5400HS: up to 1/4000 sec., wireless/remote control: 1/60 sec., ratio control: 1/45 sec.)
Self–timer	: Electronic with 10 sec. delay; cancelable (indicated by Self–Timer Lamp)

BUILT–IN FLASH

Type	: Manual pop–up
Guide number	: 12 (ISO 100)
Coverage	: for 28mm lenses
Recycling time	: Approx. 2 sec. (Based on Minolta's standard test method)
P mode flash	: Flash fires automatically in back–lit and/or low–light conditions when built–in flash is up. Manual fill–flash available with Flash–Control Button.
A/S/M mode flash	: Flash always fires when built–in flash is up.
Slow–shutter sync	: Slow–shutter sync when AE–Lock Button is pressed during shutter release.
Other features	: High–speed sync with 5400HS, Red–eye reduction selectable, wireless/remote control available; wireless/remote control range: 5m

FIIM TRANSPORT

Drive modes	: Single–frame advance, Continuous advance up to 2 frames/sec., Self–timer, Exposure bracketing, Flash bracketing, Multiple exposure up to 9 exposures
Film loading	: Auto threading, auto advance to first frame
Film rewind	: Automatic rewind or manual start of rewind, high–speed rewind available by pressing the Rewind Button during rewind
Rewind time	: Approx. 15 sec. (24–exposure film) Approx. 23 sec. (36–exposure film)
Battery performance (based on Minolta's standard test method)	: Approx. 60 rolls (24–exposure film, flash use 0%) Approx. 25 rolls (24–exposure film, flash use 50%) Approx. 15 rolls (24–exposure film, flash use 100%)

VIEWFINDER

Type	: Eye–level fixed pentaprism
Focusing screen	: Acute–matte screen (G); Service changeable screen: matte–field with grid (L) or matte field with vertical/horizontal scales (S)
Field of view	: 92% of vertical and 94% of horizontal
Magnification	: 0.75× (50mm lens at infinity)
Diopter	: –1 diopter; built–in diopter adjustment from –2.5 to +0.5 diopters (stepless); Eyepiece Corrector available
Eye–relief	: Long eye–relief viewfinder with protective glass; distance from eye to eyepiece frame: 18.4mm
Depth–of–field preview	: Aperture set while pressing the depth–of–field preview button; AF and AE locked; shutter release available
Eyepiece cup	: Soft type

DISPLAYS

Body Data Panel

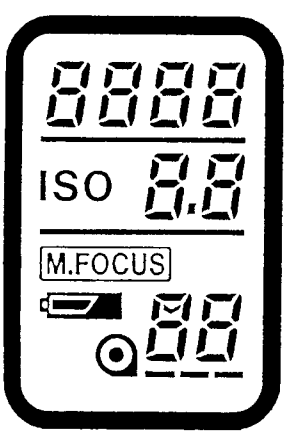

Viewfinder

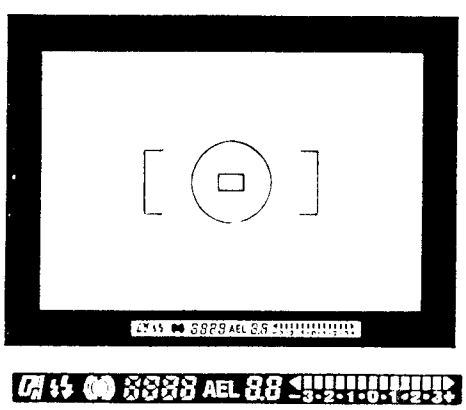

EXPOSURE CONTROL SYSTEM

Metering	: TTL type; SPC1 for ambient light, SPC2 for TTL flash metering
Metering modes	: 14–segment honeycomb–pattern metering with fuzzy logic control, Spot metering (5.5mm diameter), center–weighted average metering
Metering range	: Honeycomb–pattern, centerweighted average metering: EV 0 to 20, Spot metering: EV3 to 20
Exposure modes	: P mode with Expert Program Selection, A mode, S mode, M mode with metering index
Manual setting	: Shutter speed: 0.5–stop increments, Aperture: 0.5–stop increments
Film–speed setting	: Automatic setting for DX–coded films ISO 25 to 5000, manual setting from ISO 6 to 6400 in 1/3–stop increments; Recommended range with flash: ISO 25 to 1000
AE lock	: AE locks in all metering modes when AE–Lock Button is pressed; Metering Index appears showing the difference between the locked exposure and the exposure inside the spot circle.
Exposure compensation	: ±3 EV in 1/2–stop increments
Flash compensation	: ±2 EV in 1/2–stop increments
Exposure bracketing	: 3 frames in 1/2–stop increments (±0EV, –0.5EV, +0.5EV); when built–in flash is up or attached flash is on, brackets flash exposure

AF SYSTEM

Type	: Minolta's TTL phase–detection type
AF sensor	: Three CCD sensors
AF sensitivity range	: EV –1 to 19 (ISO 100)
Focus mode	: Auto or manual focus selection
Focus area	: Wide or spot focus area selection
AF mode	: Single–shot AF, continuous AF (multi–dimensional predictive focus control), or automatic selection of continuous AF or single–shot AF
AF speed	: 2 frames–per–second AF sequence
AF illuminator	: Built–in flash emits flash bursts in low–light/low–contrast condition. Automatically changed to AF illuminator of a dedicated flash unit when it is attached., Cancelable, Range: 1 to 5m (50mm lens; Based on Minolta's standard test method)

OTHER

Panorama (–600, –800)	: Selected by Panorama Switch, light shielded in viewfinder, data imprinting position changes accordingly.
Autozoom (with xi–series lens)	: Power focus, Auto–compact

POWER

Battery	: One 6V 2CR5 lithium battery
Battery for DATE	: One CR2025 lithium battery
Battery condition check	: Battery Power Indicator appears in 4–step at Main Sw. ON

DIMENSIONS

: 156mm(W)×98mm(H)×73.5mm(D)

WEIGHT

–100, –300	: 565g (without battery)
–200, –600, –800	: 585g (without 2CR5, including CR2025)

■Adjustments/Checks Required After Repair

☆ : Check required after repair
★ : Adjustment required after repair
*: See P. 50 for details of Data Copy.

ADJUSTMENT/CHECK	Mirror Box Assy		Shutter Assy	Aperture Base Assy	FPC–A Assy		FPC–B Assy	FPC–K Assy
	Removed	Replaced	Replaced	Replaced	Replaced		Replaced	Replaced
					---	Data Copy(*)		
Body back	☆	★	☆	☆	☆	☆	☆	
Viewfinder back	☆	★	☆	☆	☆	☆	☆	
1/4000 sec. SS			★		☆			
SS			★		★			
Aperture preset		★		★	★			
AE		☆			★	★		
SPC position	☆	★	☆	☆	★	★		★
Flash level		★			★			
Pre–flash level					★			
Wireless flash level					★			
Frame position					★			
AF	☆	★	☆	☆	★	☆	★	
B. C.–lock voltage					★	★		

ADJUSTMENT/CHECK	Eyepiece Assy	Pentaprism	AF Motor Base Assy	Winding Base Assy	Top Cover Assy	XE Holder Assy	Flash Converter PCB Assy
	Removed	Replaced	Replaced	Replaced	Replaced	Replaced	Replaced
Body back			☆				
Viewfinder back		★	☆				
1/4000 sec. SS							
SS							
Aperture preset							
AE							
SPC position	★	★					
Flash level					★	★	★
Pre–flash level					★	★	★
Wireless flash level					★	★	★
Frame position				★			
AF							
B.C.–lock voltage							★

■Preparation Before Adjustment–1

■Equipments required

: Luminance Source
: Shutter Tester
: EE Tester
: 1000mm Collimator
: Digital Multimeter
: Strobe Tester
: Master Lens
: DC Power Supply
: 10A Power Supply Jig
: 2097 ROM PACK
: HIT Controller
: HIT I/O Tester
: HIT I/F Box
: HIT Contact Jig–C
(Modification necessary; P. 53)
: SPC Chart
: Guide No. Adjusting Jig
: 2CR5 Type Power Supply Adapter
: 2CR5 Type Power Supply Adapter for B.C. Adjustment
: Preset Signal Adapter
: xi series PROGRAM/MAXXUM FLASH
: Body Signal Adapter (with x–contact)
: AEF Signal Adapter Ⅳ
: X–Cable
: REMOTE CORD RC1000 S/RC 1000L
: Temporary Top Cover (See P. 53.)
: Body Back Gauge
: Body Back Flat Plate A
: Dial Gauge
: Reflection Paper
: Hexagon Bar Wrench (ϕ1.5)/Hexagon screwdriver
: Film (Kodacolor GOLD 100 exposed in a room for more than 1 day)

※See Tools and Instruments (P. 52) for jig numbers and models.

■Instruction for using HIT system

※Make sure that no battery is installed in camera before setting up the HIT system.

1. Set up the equipments as in Fig. 1. Be sure to fit the contacts from the left as shown.
2. Attach HIT Contact Jig–C so its probes contact with the check lands of the camera, then affix them with the magic tape.
3. Insert a battery or connect 2CR5 Type Power Supply Adapter to the camera, then turn the camera and HIT Controller on. The main menu appears in LCD (Fig. 2).
4. Select an item using Control Pad so the selected item will appear in a black box. Then press SELECT Button to enter.

■Fig. 1

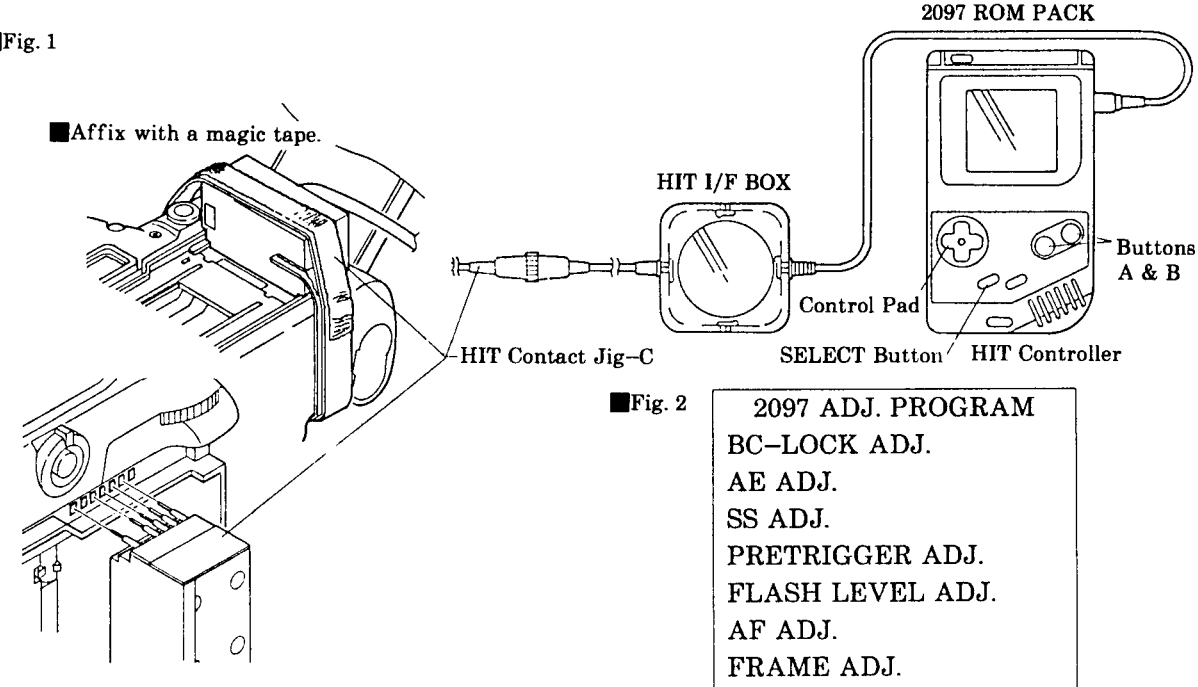

■Fig. 2

2097 ADJ. PROGRAM
BC–LOCK ADJ.
AE ADJ.
SS ADJ.
PRETRIGGER ADJ.
FLASH LEVEL ADJ.
AF ADJ.
FRAME ADJ.
ASSIST MODE

■Adjustment/Check Using 2097 ROM PACK

■The following adjustments and checks are available using 2097 ROM PACK

(Main Menu)	(Sub Menu)
• BC–LOCK ADJ. (P. 44)	
• AE ADJ.	AE ADJ. (P. 36) AE CHECK (P. 36) SPC ADJ. (P. 37)
• SS ADJ. (P. 38)	
• PRETRIGGER ADJ. (P. 39)	
• FLASH LEVEL ADJ.	FLASH LEVEL ADJ. (P. 40) FLASH LEVEL CHECK (P. 40) PRE FIRE ADJ. (P. 41) WIRELESS FIRE ADJ. (P. 42)
• AF ADJ.	AREA ADJ. (P. 46) PY ADJ. (P. 47) FLATNESS ADJ. (P. 48) EZ ADJ. (P. 49) EZ CHECK (P. 49)
• FRAME ADJ. (P. 43)	
• ASSIST MODE	DATE COPY (P. 50) HELP CODE (P. 6 in TROUBLE SHOOTING CHART) SW CHECK (P. 4, 5 in TROUBLE SHOOTING CHART) SW CHECK (P. 4, 5 in TROUBLE SHOOTING CHART)

■LCD Displays Check

■Check

1. Set Drive Mode Selector to multiple exposure.
2. Press and hold Film Speed Button while removing and re–installing the battery.
   All displays appear in Body and Viewfinder Data Panels.

※Removing and re–installing the battery will return the displays to normal.

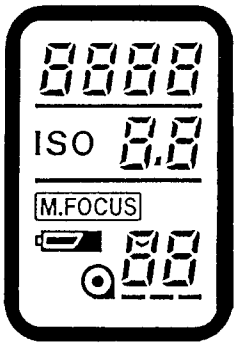

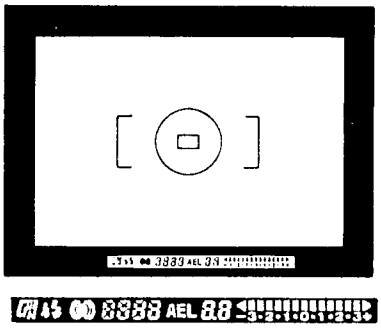

■Body Back Adjustment

■Equipments required

: Body Back Gauge

: Body Back Flat Plate A

: Dial Gauge

■Check

1. Set Dial Gauge as in Fig. 1.
2. Measure distance between the guide rail and bayonet mount surface (body back) as in Fig. 2.
3. Check that the reading is within the standard range below.

※ If not, adjust the body back as follows.

■Adjustment

- To increase Body Back: Add adjustment washers beneath the bayonet mount.
- To decrease Body Back: Replace the Bayonet Mount with the one for service #2072–1010–81(*), and install/remove adjustment washers.

*Bayonet Mount #2072–1010–81 is 0.1mm thinner than that of #2072–1010–02.

Standard: 44.700±0.020mm

[Adjustment washer]

Part No.	2005–1061–81	2005–1062–81	2005–1063–81
Thickness (mm)	0.02	0.05	0.1

■Fig. 1

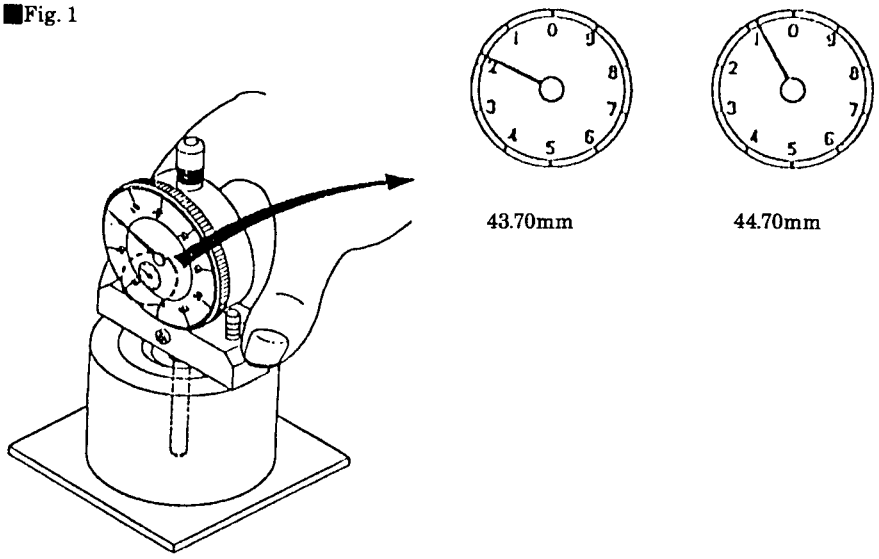

■Fig. 2

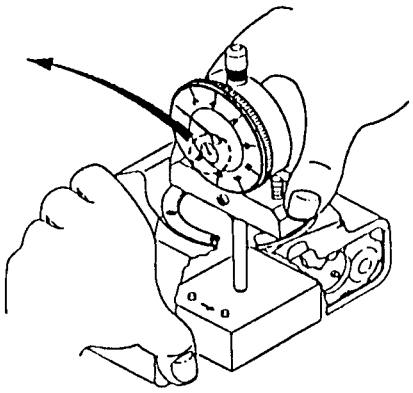

■Viewfinder Back Adjustment

■Equipments required
: 1000mm Collimator
: Master Lens
: Hexagon Bar Wrench (ϕ1.5)

■Check
1. Set the camera so that the chart is positioned at the center of Viewfinder, then set Master Lens' Focus Ring to infinity position. (Fig. 1)
2. Check that the chart is in focus.
   ※ If not, adjust mirror position as follows.

■Adjustment
3. Remove the lens from the camera.
4. Holding the mirror up with a finger, move VB adjuster up and down so the chart is in focus.
5. Release the shutter several times, then turn the lens' Focus Ring until it stops at infinity, and check that the chart is in focus.

■Fig. 1

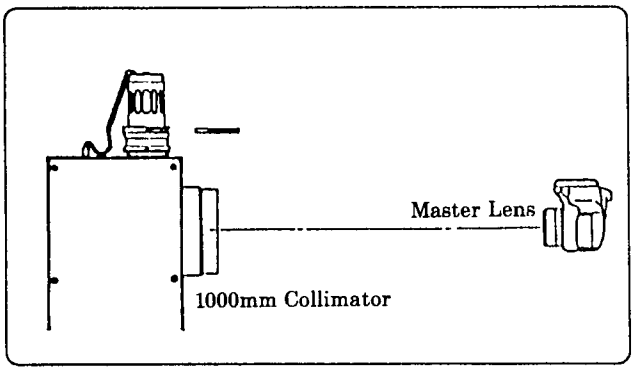

■Fig. 2

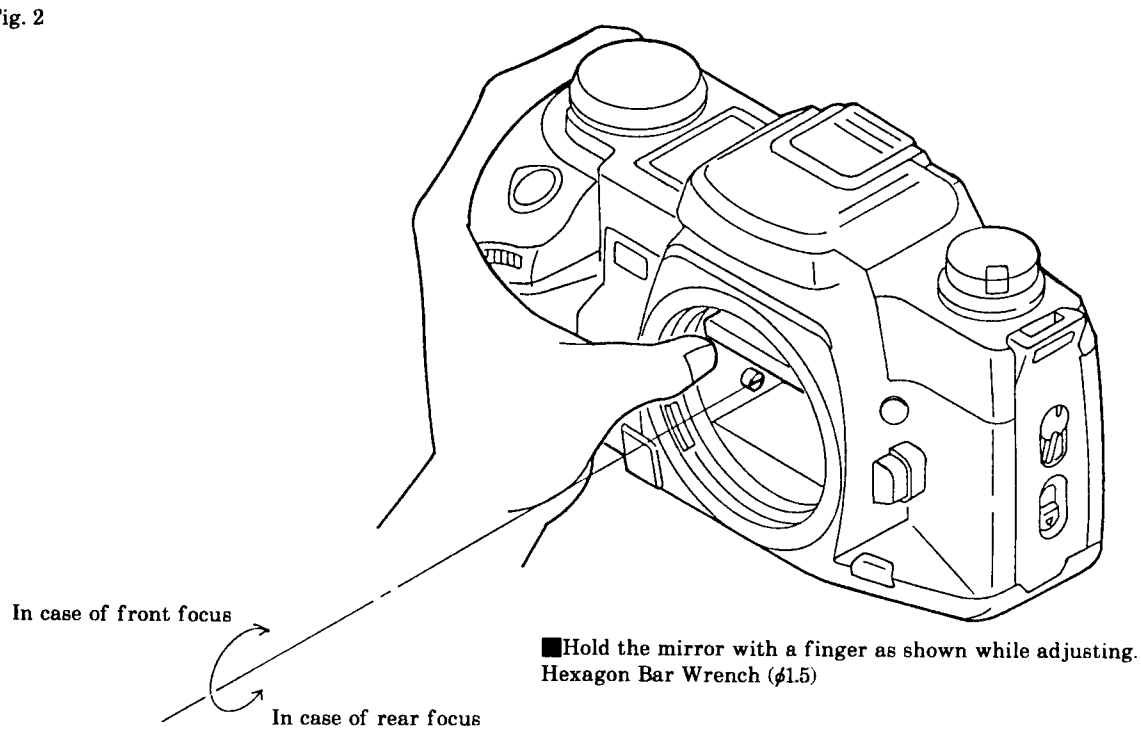

■1/4000 sec. SS Adjustment

■Equipments required
: Shutter Tester
: Hexagon Bar Wrench (ϕ1.5)/ Hexagon Screwdriver
: REMOTE CORD RC 1000S/RC 1000L
: 2CR5 Type Power Supply Adapter
: DC Power Supply

■Check
1. Set the equipments as in Fig. 1.
2. Set shutter speed to 1/4000 and release the shutter.
3. Check that the readings at range A, B, and C are in lined combination as in table below.
   ※ If not, adjust as follows.

■Adjustment
4. Remove Top Cover Assy.
5. Fasten a screw so that FPC–A and FPC–K are connected.
6. Remove solder on FPC–N to lift the LCD Base. (Fig. 2)
7. Set the camera and equipments as in Fig. 3.
8. Adjust the indicated screw with Hexagon Wrench (Fig. 2).
   *Be sure to remove the wrench before procedure 9 or wrong readings may be obtained.
9. Release the shutter using Remote Cord and check that the readings are in correct combinations.

■Fig. 1

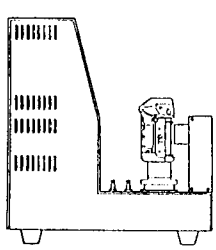

■Fig. 2

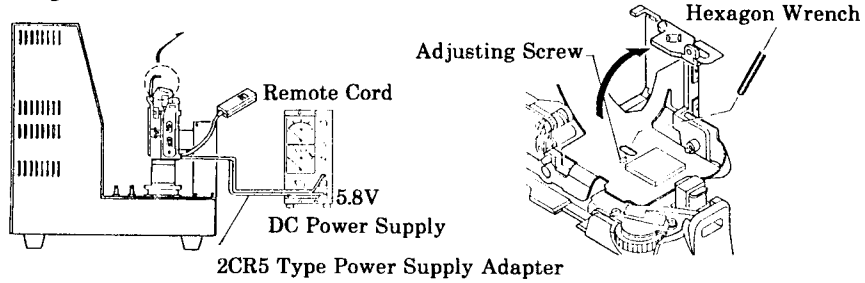

A Range	B Range	C Range
0.228 – 0.300	0.167 – 0.177	0.138 – 0.209
0.235 – 0.313	0.178 – 0.187	0.145 – 0.221
0.242 – 0.324	0.188 – 0.197	0.152 – 0.233
0.249 – 0.336	0.198 – 0.207	0.158 – 0.244
0.256 – 0.348	0.208 – 0.217	0.165 – 0.256
0.262 – 0.359	0.218 – 0.227	0.172 – 0.267
0.269 – 0.371	0.228 – 0.237	0.179 – 0.279
0.276 – 0.383	0.238 – 0.247	0.186 – 0.290
0.283 – 0.394	0.248 – 0.257	0.192 – 0.302
0.290 – 0.406	0.258 – 0.267	0.199 – 0.313
0.297 – 0.418	0.268 – 0.277	0.206 – 0.324
0.304 – 0.429	0.278 – 0.287	0.213 – 0.336
0.311 – 0.441	0.288 – 0.297	0.220 – 0.347
0.318 – 0.453	0.298 – 0.307	0.227 – 0.359
0.325 – 0.464	0.308 – 0.317	0.233 – 0.370
0.332 – 0.476	0.318 – 0.327	0.240 – 0.382
0.339 – 0.488	0.328 – 0.337	0.247 – 0.393
0.346 – 0.499	0.338 – 0.347	0.254 – 0.405
0.353 – 0.511	0.348 – 0.357	0.261 – 0.416

■Manual SS & X–Sync. Time–Lag Check

■Equipments required

: Shutter Tester
: Body Signal Adapter (with x–contact)
: X–Cable
: AEF Signal Adapter Ⅳ

■Manual SS Check

1. Set the camera to shutter tester. (Fig. 1)
2. According to the table–1, measure each shutter speed at range B, and check that the reading is within the tolerance.

■X–sync. time–lag check

1. Set the camera and equipments as in Fig. 2.
2. Set shutter speed to 1/200 sec. and measure X–sync. time–lag to check that the reading meets the standard in Table–2.

■Fig. 1

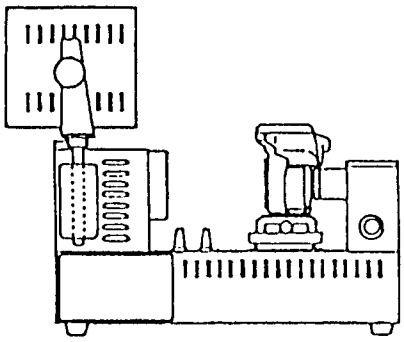

■Fig. 2

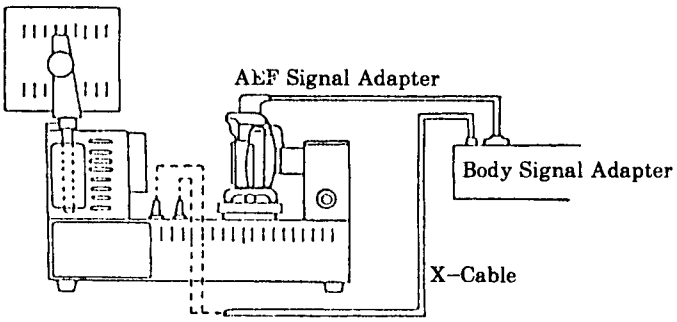

Table–1

SS	Standard at range B (ms)	Tolerance at range B (ms)	Uneveness of exposure
1/4000	0.244	0.167–0.357	As for the readings at range A, C, refer to the table on page 32.
1/2000	0.488	0.357–0.667	
1/1000	0.977	0.740–1.289	
1/125	7.81	6.350–9.620	
1/2	500	467–536	

Table–2

SS	S–2201	S–2101	Tolerance (ms)
1/200	Range D	Range A	0.35 or more
	Range E	Range B	1.45 or more

■AE Level Check/Aperture Control Check

■Equipments required
: Luminance Source
: EE Tester
: Master Lens

■AE Level Check
1. Set the camera and equipments as in Fig. 1.
2. According to the table below, measure each exposure value with the designated camera setting.
3. Check that all exposure values are within the standard range (0±1.0EV).

Exposure mode	Shutter speed	Aperture	Luminance	Standard range
P	---	---	EV15 EV12 EV10 EV6 EV4	0±1.0EV
A	---	F5.6 F1.7 F5.6 F22 F5.6	EV15 EV10 EV10 EV10 EV6	
S	1/1000 1/250 1/30 1/8 1	---	EV15 EV10 EV10 EV10 EV6	

■Fig. 1

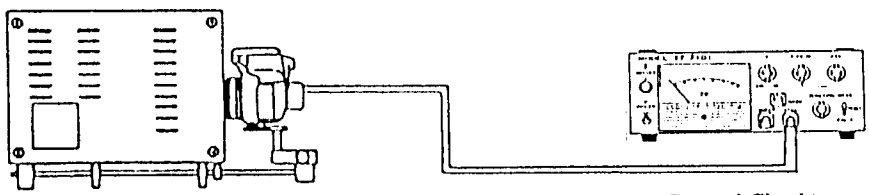

(AE Level Check)
Luminance Source:
K value: 1.3
Luminance: See table above.
Camera:
ISO: 100
Exposure mode:See table above.
Aperture: See table above.
Shutter speed: See table above.
Focus mode: M
Master Lens:
Focus Ring: ∞
EE Tester:
K value: 1.3
ASA: 100

(Aperture Control Check)
Luminance Source:
K value: 1.3
Luminance: EV11
Camera:
Exposure mode: M
Aperture: F5.6
Shutter speed: Bulb
Focus mode: M
Master Lens:
Focus Ring: ∞
EE Tester:
K value: 1.3
F value: F5.6
ASA: F
MEAS, CALF: CALF

■Aperture Control Check
1. Set the camera and equipments as in Fig. 1.
2. Release the shutter to check the pointer of EE Tester indicates within 0±0.25EV.
※Reading may be above/below this range depending on the lens' aperture tolerance.

■Flash Level Check (using Strobe Tester)

■Equipments required

: Strobe Tester
: Master Lens
: xi series PROGRAM/MAXXUM FLASH
: Reflection paper
: Film (Kodacolor Gold 100 exposed in a room for more than 1 day)

■Check

※Perform this check in a dark room.

1. Set the camera and equipments as in Fig. 1.
2. Turn the flash on and check that the flash ready signal glows.
3. Hold Strobe Tester beside the camera (Fig. 1). And looking through the viewfinder of Strobe Tester, align eye point in the viewfinder to the center of Reflection Paper.
4. Press Strobe Tester's measuring button to set the tester to the stand by condition ("NON.C" blinks.), then release the shutter.
5. Check that the reading of Strobe Tester is within standard range (F5.6±0.5EV).

Standard: F5.6±0.5EV

■Fig. 1

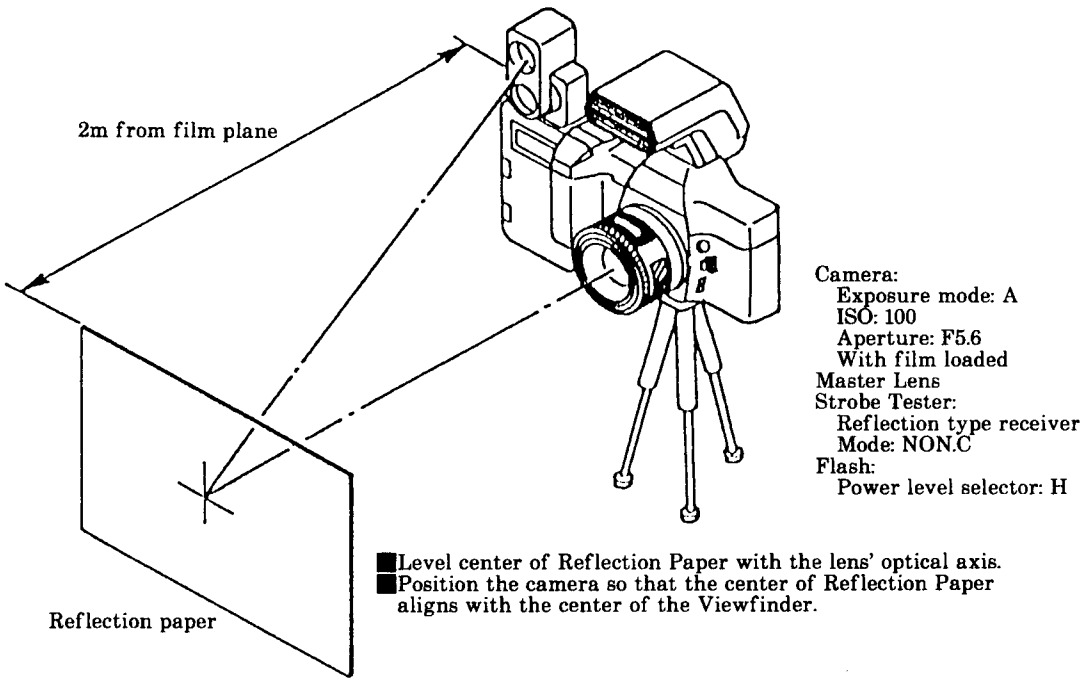

■AE Adjustment & Check

※Be sure to complete these adjustment and check before "SPC Position Adjustment (P. 37)."

■Equipments required

: Luminance Source
: Master Lens
: HIT Controller
: 2097 ROM PACK
: HIT Contact Jig–C (Modification necessary; P. 53)
: HIT I/F BOX

■Adjustment

1. Set the equipments as in Fig. 1.
2. Select "AE ADJ." in main menu using Control Pad, and press SELECT Button.
3. Select "AE ADJ." in AE adjustment menu using Control Pad, and press SELECT Button.
4. Set Luminance Source to EV6 then press SELECT Button.
   *Panorama model –600 and –800 should be set to normal frame.
5. Press Shutter–Release Button partway down.
6. Set Luminance Source to EV15, then press SELECT Button.
7. Press Shutter–Release Button partway down.
8. Select panorama or normal model as follows.
   • For –600 and –800 model:
   ①Select "PANORAMA MODEL", and press SELECT Button.
   ②Set Luminance Source to EV15, press SELECT Button.
   ③Set the camera to panorama frame.
   ④Press Shutter–Release Button partway down. "COMPLETE" appears when adjustment is completed.
   • For –100, –200, –300 model:
   ①Select "NORMAL MODEL", and press SELECT Button. "COMPLETE" appears when adjustment is completed.
9. Press SELECT Button. Displays are replaced with the AE adjustment menu.

■Check

10. Select "AE CHECK" in the AE adjustment menu with Control Pad, and press SELECT Button.
11. Set Luminance Source to EV10.
12. Press Shutter–Release Button partway down. Displays as Fig. 2 appears.
13. Check that value in each cell is within ±0.3EV. (Fig. 2).
    ※Also check with EV6 and EV15.
14. Press SELECT Button. Displays are replaced with the AE adjustment menu.

■Fig. 1

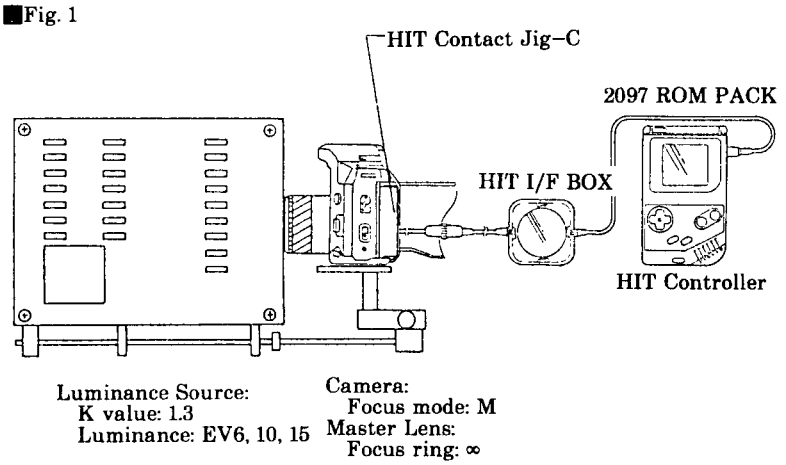

■Fig. 2

Displays with EV10

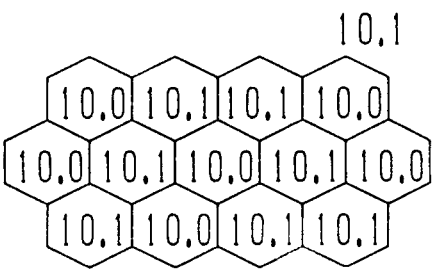

■SPC Position Adjustment

※Complete the AE Adjustment (P. 36) beforehand.

■Equipments required

: HIT Controller
: 2097 ROM PACK
: HIT Contact Jig–C (Modification necessary; P. 53)
: HIT I/F BOX
: Master Lens
: SPC Chart
: Temporary Top Cover

■Adjustment

1. Install Temporary Top Cover and Front Cover Assy.
2. Set the camera and equipments as in Fig. 1.
3. Select "AE ADJ." in main menu using Control Pad, then press SELECT Button.
4. Select "SPC ADJ."in AE adjustment menu using Control Pad, then press SELECT Button.
5. Press Shutter–Release Button partway down.
6. Adjust the eccentric screws (Fig. 3) so that marking " ◇ " is inside of the white box in the screen display (Fig. 2).
7. Apply B–10 to the eccentric screws.
8. Press SELECT Button. Displays are replaced with the AE adjustment menu.

■Fig. 1

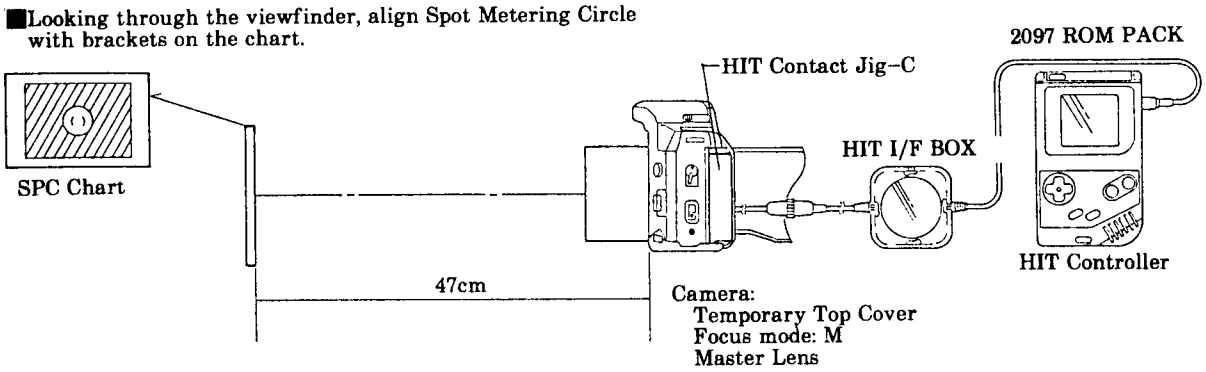

■Fig. 2

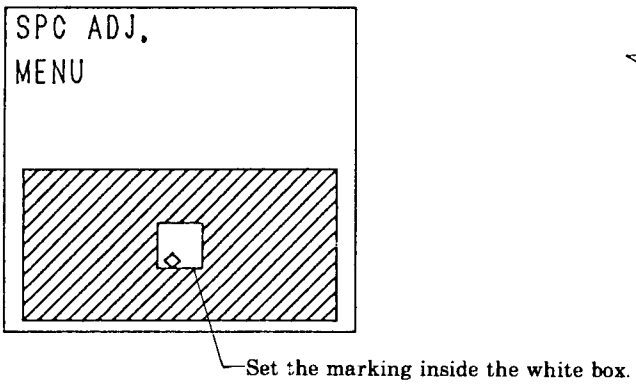

■Fig. 3

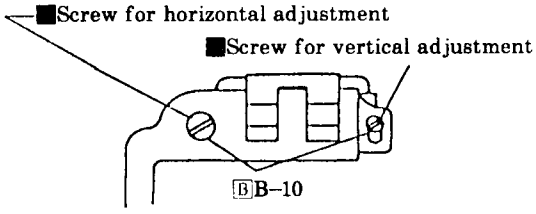

■SS Adjustment

■Equipments required
: Shutter Tester
: HIT Controller
: 2097 ROM PACK
: HIT Contact Jig–C (Modification necessary; P. 53)
: HIT I/F BOX

■Check
1. Set the camera to Shutter Tester. (Fig. 1)
2. Set the shutter speed to 1/4000 sec.
3. Release the shutter several times and read center value of the range B.
   ※If the center value is out of standard, adjust as follows.

■Adjustment
4. Set the equipments as in Fig. 2.
5. Select "SS ADJ." in main menu using Control Pad, then press SELECT Button.
6. Select "250" using Control Pad.
7. Set the center value (s) obtained at procedure 3 using Control Pad and Button–A/–B, then press SELECT Button.
   - To change the value in 5 s–stop: Press upper/lower Control Pad while pressing and holding Button–A.
   - To change the value in 10 s–stop: Press upper/lower Control Pad while pressing and holding Button–B.
8. Press Shutter–Release Button partway down. "COMPLETE" appears.
9. Press SELECT Button. Displays are replaced with the main menu.

Standard: 0.167–0.357

■Fig. 1

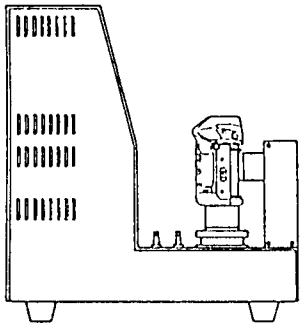

■Fig. 2

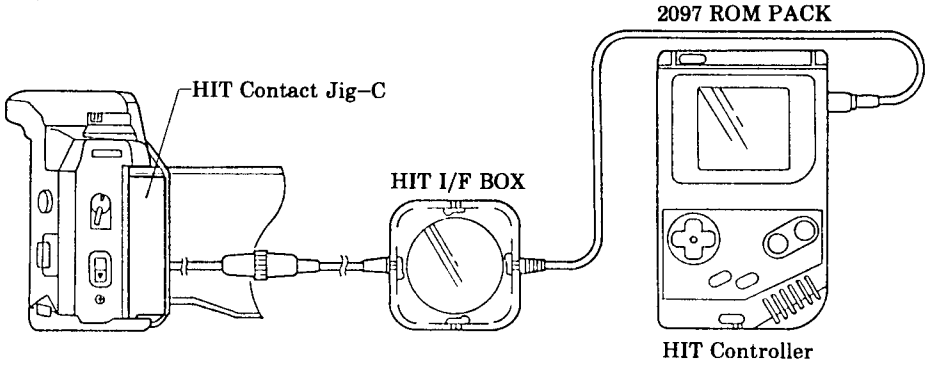

■Aperture Preset Adjustment

■Equipments required
: HIT Controller
: 2097 ROM PACK
: HIT Contact Jig–C (Modification necessary; P. 53)
: HIT I/F BOX
: HIT I/O Tester
: Preset Signal Adapter

■Adjustment
1. Set the camera and equipments as in Fig. 1.
2. Select "PRETRIGGER ADJ." in main menu with Control Pad, and press SELECT Button.
3. Press SELECT Button again.
4. Press Shutter–Release Button partway down. An aperture display appears in both camera and HIT Controller displays.
   ※Check that the camera and HIT Controller show the same aperture display.
5. Press Reset Button on HIT I/O Tester so that "00" appears in its display.
6. Press and hold Shutter Release Button all the way down and read value on HIT I/O Tester.
7. Input the reading to HIT Controller:
   • To input the first figure: Press and hold Button–A while pressing upper/lower Control Pad.
   • To input the second figure: Press and hcld Button–B while pressing upper/lower Control Pad.
8. Press SELECT Button.
9. Press Shutter–Release Button partway down. Next aperture display appears in Data Panels.
10. Repeat procedure 5 to 9 until "COMPLETE" appears.
    ※Aperture is automatically set in the order of; F2, F2, F2.8, F4, F16, F22.
11. Press "SELECT" Button. Displays are replaced with the main menu.

■Check
1. Set the camera and equipments as in Fig. 1. Set the camera's exposure mode to M, shutter speed to Bulb.
2. Press Reset Button on HIT I/O Tester so that "00" appears in the display.
3. Set aperture according to the table–1, and press and hold Shutter–Release Button all the way down.
4. Read HIT I/O Tester during the shutter release to check that the reading is within standard range in the table–1. Check all aperture settings in the table–1.

■Fig. 1

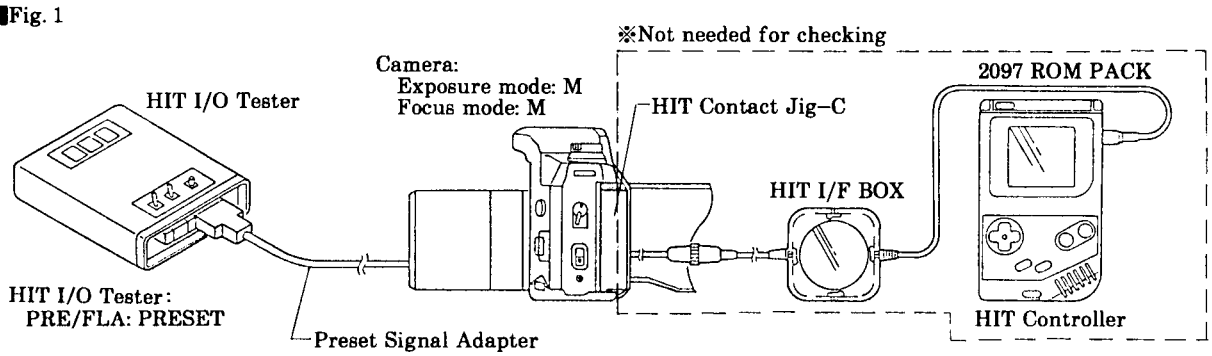

Table–1

Aperture	Standard (HIT I/O Tester)
F2.4	15–26
F4	47–57
F5.6	69–78
F11	Ab–bb
F22	EE–FE

NOTE: These indications look similar in display of the HIT I/O Tester:

6 ---- 6

b ---- b

※Figures in HIT I/O Tester is in hexadecimal notation

■Flash Level Adjustment & Check

■Equipments required

: Luminance Source
: HIT Controller
: 2097 ROM PACK
: HIT Contact Jig–C (Modification necessary; P. 53)
: HIT I/F BOX
: Master Lens
: Reflection Paper

■Adjustment

1. Set the equipments as in Fig. 1.
2. Select "FLASH LEVEL ADJ." in main menu using Control Pad, then press SELECT Button.
3. Select "FLASH LEVEL ADJ." in flash level adjustment menu with Control Pad, then press SELECT Button.
4. Set Luminance Source to EV10. Then press SELECT Button.
5. Press and hold Shutter Release Button partway down until "COMPLETE" appears. Shutter is automatically released three times before the "COMPLETE" appears.
6. Press SELECT Button. Displays are replaced with the flash level adjustment menu.

■Check

7. Select "FLASH LEVEL CHECK" in the flash level adjustment menu using Control Pad, then press SELECT Button.
8. Set Luminance Source to EV10. And press SELECT Button.
9. Press and hold Shutter Release Button partway down until "COMPLETE" appears. Shutter is automatically released once before the "COMPLETE" appears.
   ※Check that the flash level for ISO 100 is ±0.4EV.(Fig. 2)
10. Press SELECT Button. Displays are replaced with the flash adjustment menu.
    Standard: ±0.4EV

■Fig. 1

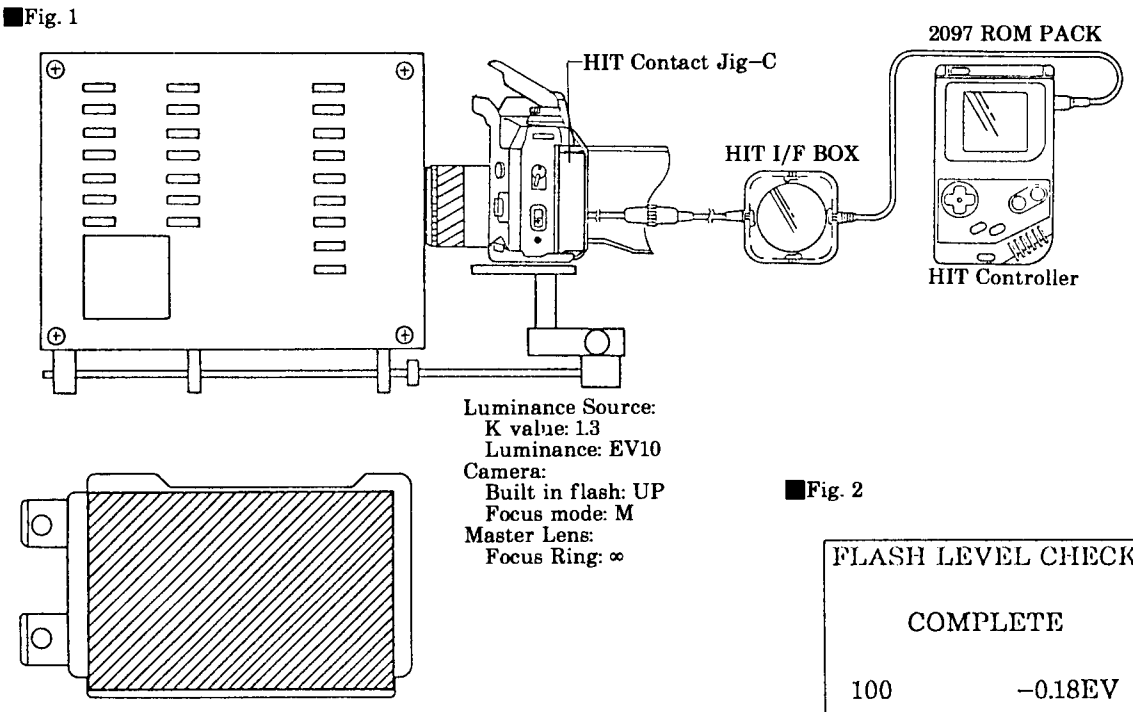

■Attach a Reflection Paper to a Pressure Plate to be discarded. And hold them at the camera back on film plane.

■Fig. 2

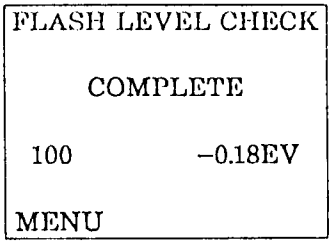

■Pre–Flash Level Adjustment

■Equipments required

: Strobe Tester
: Guide No. Adjusting Jig
: HIT Controller
: 2097 ROM PACK
: HIT Contact Jig–C (Modification necessary; P. 53)
: HIT I/F BOX

■Check

1. Set the equipments as in Fig. 1.
2. Select "FLASH LEVEL ADJ." in main menu using Control Pad, then press SELECT Button.
3. Select "PREFIRE ADJ." in flash level adjustment menu using Control Pad, and press SELECT Button.
4. Press Shutter–Release Button partway down.
5. Select "FIRE" with Control Pad and press SELECT Button.
6. Press Shutter–Release Button partway down so built–in flash fires.
   Check that reading in Strobe Tester is within standard range.
   ※If not, adjust as follows.

■Adjustment

7. Press right/left side of Control Pad to adjust flash output.
   • To increase flash output: Press the right of Control Pad.
   • To decrease flash output: Press the left of Control Pad.
8. Repeat procedure 5, 6, and 7 until the reading meets the standard.
9. Select "MENU" with Control Pad and press SELECT Button. Displays are replaced with the flash level adjustment menu.

Standard range: F8+0.2 – F11+0.2

■Fig. 1

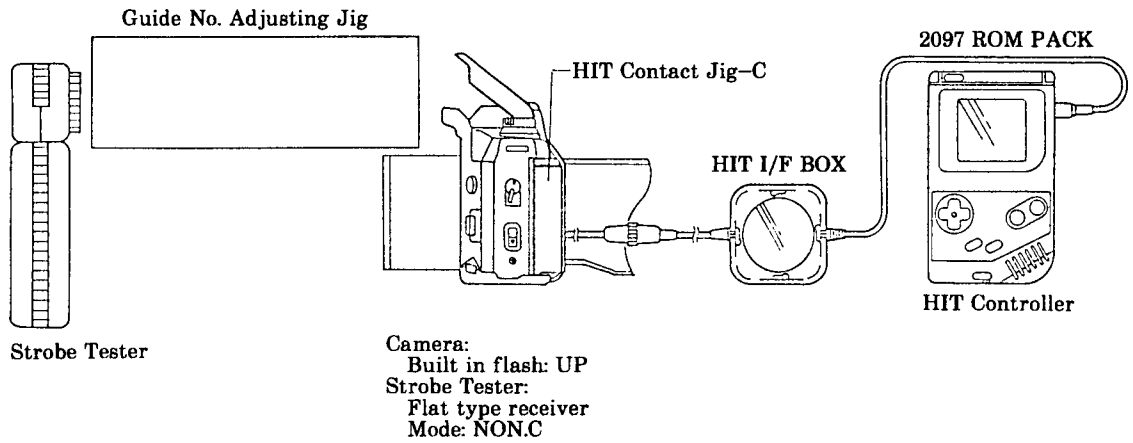

■Wireless Flash Level Adjustment

■Equipments required

: Strobe Tester
: Guide No. Adjusting Jig
: HIT Controller
: 2097 ROM PACK
: HIT Contact Jig–C (Modification necessary; P. 53)
: HIT I/F BOX

■Check

1. Set the equipments as in Fig. 1.
2. Select "FLASH LEVEL ADJ." in main menu using Control Pad, then press SELECT Button.
3. Select "W–LESSFIRE ADJ." in flash level adjustment menu using Control Pad, and press SELECT Button.
4. Press Shutter–Release Button partway down.
5. Select "FIRE" with Control Pad, and press SELECT Button.
6. Press Shutter–Release Button partway down so that the built–in flash fires. Check that reading in Strobe Tester is within standard range.
   ※If not, perform adjustment as follows.

■Adjustment

7. Press right or left of Control Pad to adjust flash output.
   • To increase flash output: Press the right of Control Pad.
   • To decrease flash output: Press the left of Control Pad.
8. Repeat procedure 5, 6, and 7 until the reading meets the standard range.
9. Select MENU using Control Pad and press SELECT Button. Displays are replaced with the flash level adjustment menu.

Standard range: F2.8 – F4

■Fig. 1

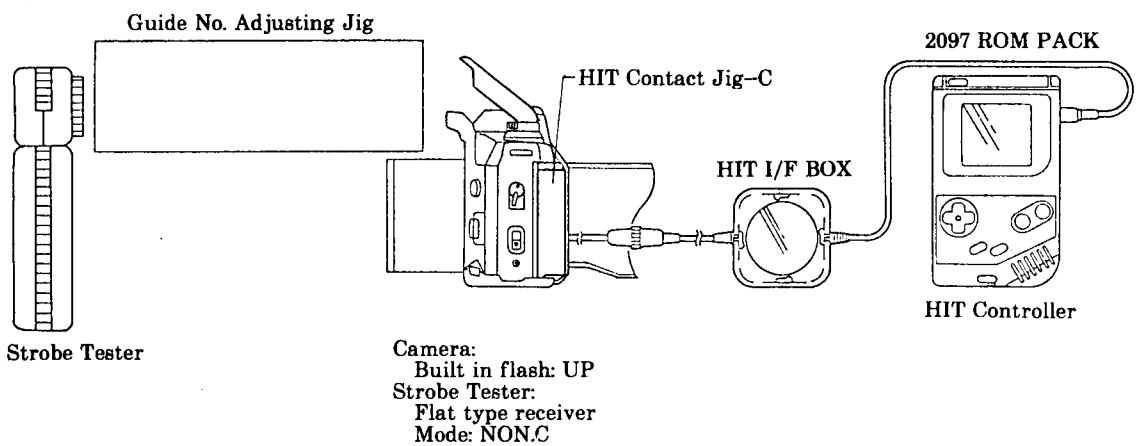

■Frame Position Adjustment

■Equipments required

: 10A Power Supply Jig
: 2CR5 Type Power Supply Adapter
: HIT Controller
: 2097 ROM PACK
: HIT Contact Jig–C (Modification necessary; P. 53)
: HIT I/F BOX

■Adjustment

1. Set the equipments as in Fig. 1.
2. Select "FRAME ADJ." in main menu using Control Pad, then press SELECT Button.
3. Again, press SELECT Button.
4. Press Shutter–Release Button partway down. "COMPLETE" appears.
5. Select "MENU" using Control Pad, then press SELECT Button. Displays are replaced with the main menu.

■Fig. 1

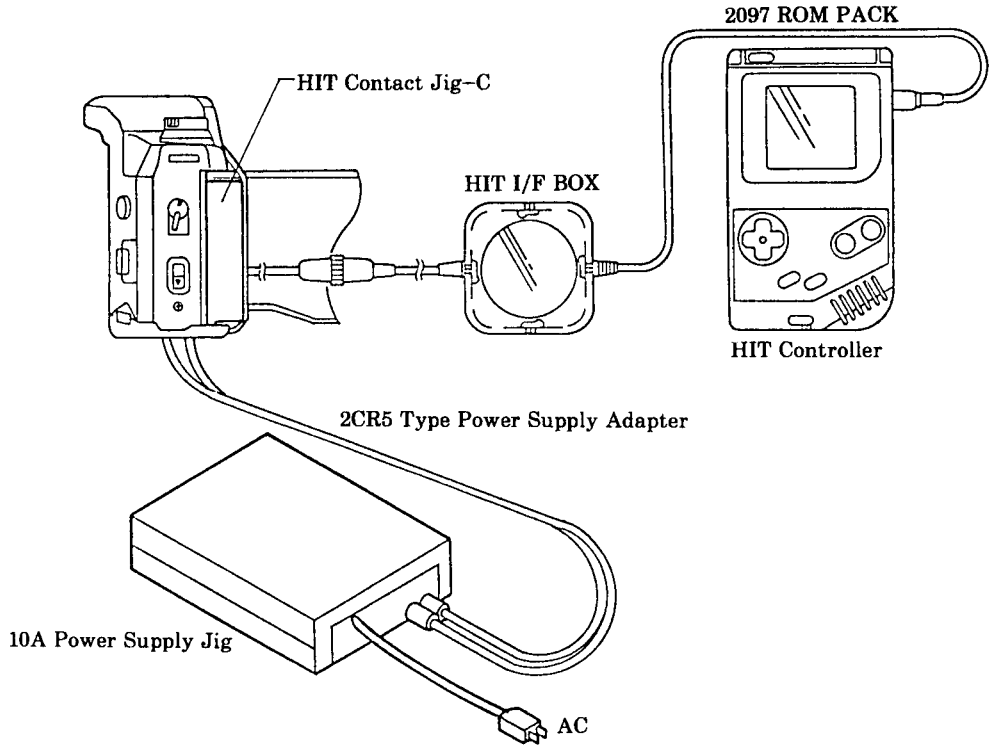

■B. C. Lock Voltage Adjustment

■Equipments required

: DC Power Supply
: Digital Multimeter
: 2CR5 Type Power Supply Adapter for B.C. Adjustment
: HIT Controller
: 2097 ROM PACK
: HIT Contact Jig–C (Modification necessary; P. 53)
: HIT I/F BOX

■Adjustment

1. Set the equipments as in Fig. 1.
2. Select "BC–LOCK ADJ." in main menu using Control Pad and press SELECT Button.
3. Press SELECT Button again. Press Shutter–Release Button partway down.
4. Set DC Power Supply to 5.05V, then press SELECT Button.
5. Press Shutter–Release Button partway down twice. "COMPLETE" appears in the display.
6. Select "MENU" with Control Pad and press SELECT Button. Displays are replaced with the main menu.

■Check

7. Check that B.C. lock operates at the voltage as below.

Standard: 4.75V or less

■Fig. 1

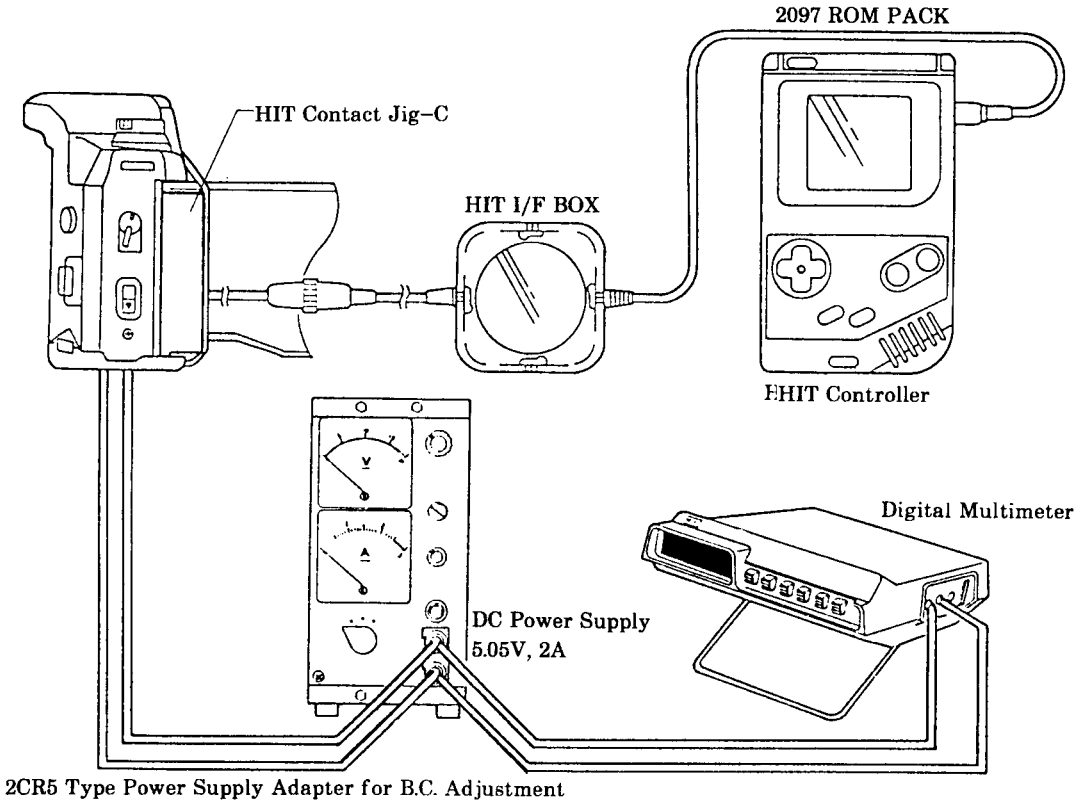

■Preparation Before Adjustment–2 (AF adjustment)

※After replacing FPC–A, FPC–B, or parts attached to Mirror Box, always perform AF adjustments ① to ④ (P.46 – P.49). These adjustments are also necessary for repairs of poor focus.

■Before starting AF adjustments

※Check the following before starting AF adjustments.

1. Body Back and Viewfinder Back are correctly adjusted.
2. All external parts except for Bottom Cover are installed.
3. When CCD Sensor Module is out of position after replacing FPC–B, three AF Adjusting Screws #2089–5051 are tightened until they stopped, then evenly loosened by 1.14 turns (0.4mm).

■Equipments required

※See "Tools & Instruments" (P. 52) for model and jig numbers.

: Luminance Source
: 1000mm Collimator
: AF Master Lens
: Master Lens
: AF Chart V
: AF Chart VI (Modification necessary; P. 54)
: AF Chart VII
: HIT Controller
: 2097 ROM PACK
: HIT Contact Jig–C (Modification necessary; P. 53)
: HIT I/F BOX
: AF–Y.P. Adjuster
: AF Tripod Attachment II
: Grip Ring
: TORX L Wrench
: Hexagon Bar Wrench (ϕ1.5) or Hexagon Screwdriver
: Flood Lamp (having color temperature of about 2800°K.)

■Fig. 1

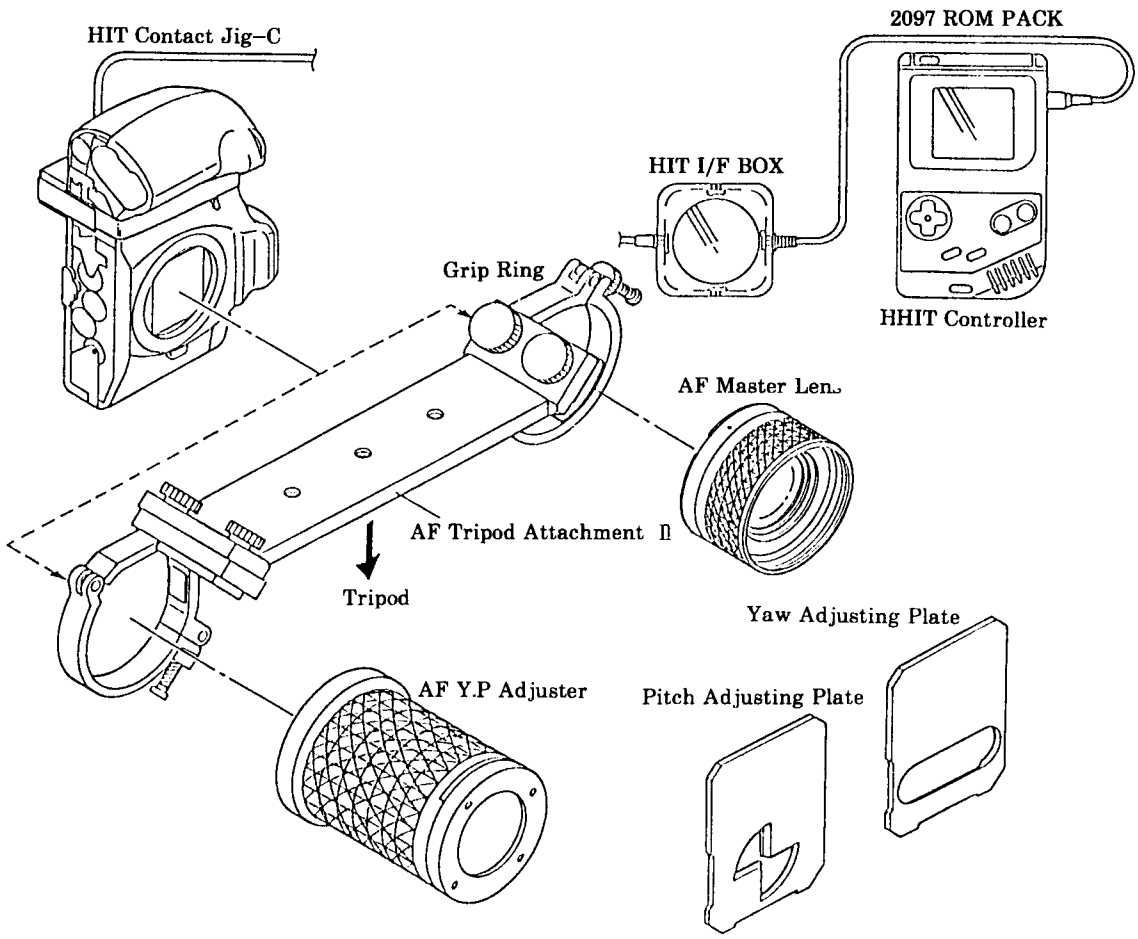

①AF Area Adjustment

■Check

1. Set up HIT system, and set the camera and AF Chart V as in Fig. 1.
2. Select "AF ADJ." in main menu using Control Pad, and press SELECT Button.
3. Select "AREA ADJ." in AF adjustment menu using Control Pad, and press SELECT Button.
4. Press Shutter–Release Button partway down so lines with dents and a reading appear in HIT Controller. Check that each of the line has two dents as in Fig. 2 and the reading is within standard below.

※If not, perform adjustment as follows.

■Adjustment

5. Adjust sub mirror position using Hexagon Bar Wrench as in Fig. 3.
6. Repeat procedure 3 to 5 until the value is within the standard.
7. Press SELECT Button. Displays are replaced with the AF adjustment menu.

Standard: 100±4

■Fig. 1

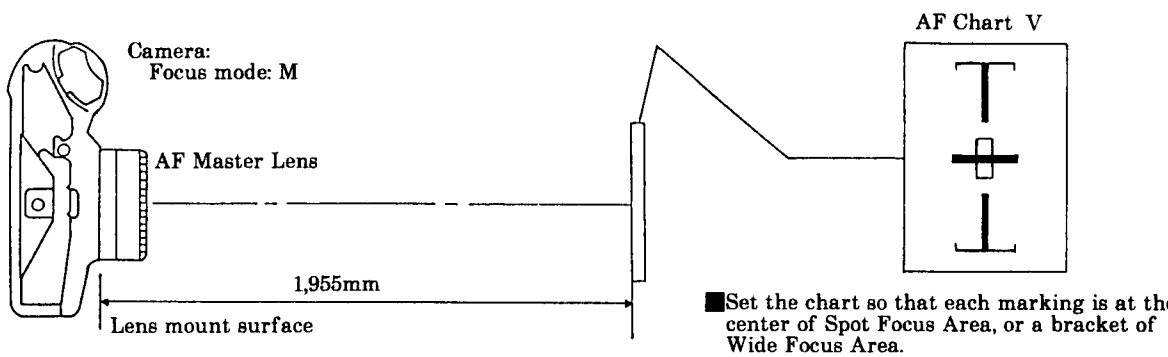

■Fig. 2

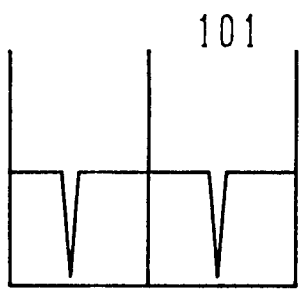

■Fig. 3

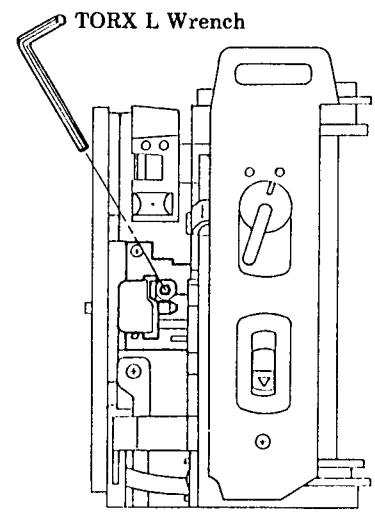

②Pitch, Yaw Adjustment

※Light up the camera with a flood lamp during Pitch, Yaw adjustment

■Pitch Adjustment

1. Set up the HIT system, and insert Pitch Adjusting Plate to Y.P Adjuster. (Fig. 1)
2. Select "AF ADJ." in main menu using Control Pad, and press SELECT Button.
3. Select "PY ADJ." in AF adjustment menu using Control Pad, and press SELECT Button.
4. Press Shutter–Release Button partway down. Displays as Fig. 2 appear in HIT Controller.
5. Turn Pitch Adjusting Screw (Fig. 4) so that the reading in the HIT Controller display (Fig. 2) is within standard range (090 – 110).

■Yaw Adjustment

6. Insert Yaw Adjusting Plate to Y.P Adjuster. (Fig. 3)
7. Turn Yaw Adjusting Screw as in Fig. 4 so that the value in the HIT Controller display (Fig. 2) is within standard range (083 – 110).
8. Press SELECT Button. Displays are replaced with AF adjustment menu.

■Check

9. Check AF area referring to page 46. If required, perform ① AF Area Adjustment and ② Pitch, Yaw Adjustment repeatedly until all readings meet standard.

Standard:	Pitch: 090 – 110
	Yaw: 083 – 110

■Fig. 1

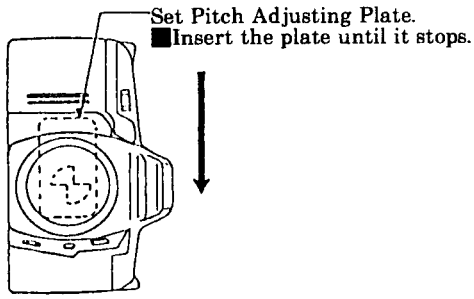

■Fig. 2

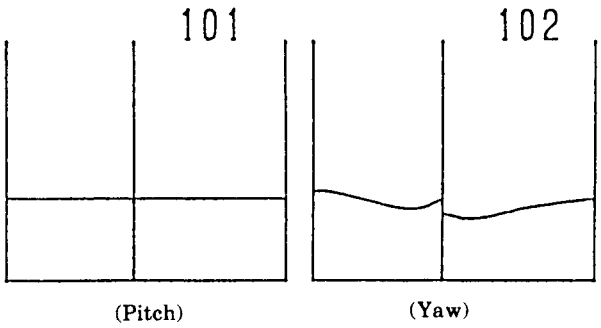

■Fig. 3

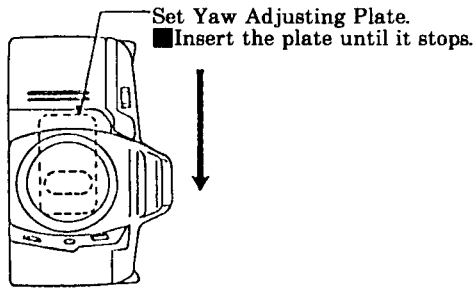

■Fig. 4

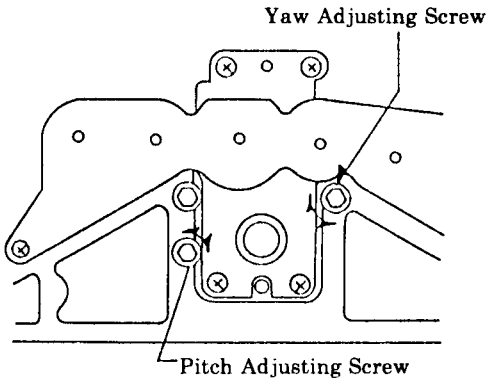

③Flatness Adjustment

■Adjustment

1. Set up the equipments as in Fig. 1.
2. Select "AF ADJ." in main menu using Control Pad, and press SELECT Button.
3. Select "FLATNESS ADJ." in AF adjustment menu using Control Pad, and press SELECT Button.
4. Set Luminance Source to EV15. Then press SELECT Button.
5. Press and hold Shutter–Release Button until "SW. 1 OFF" appears in HIT Controller display.
6. Again, press Shutter–Release Button partway down until "COMPLETE" appears.
7. Press SELECT Button. Displays are replaced with the AF adjustment menu.

■Fig. 1

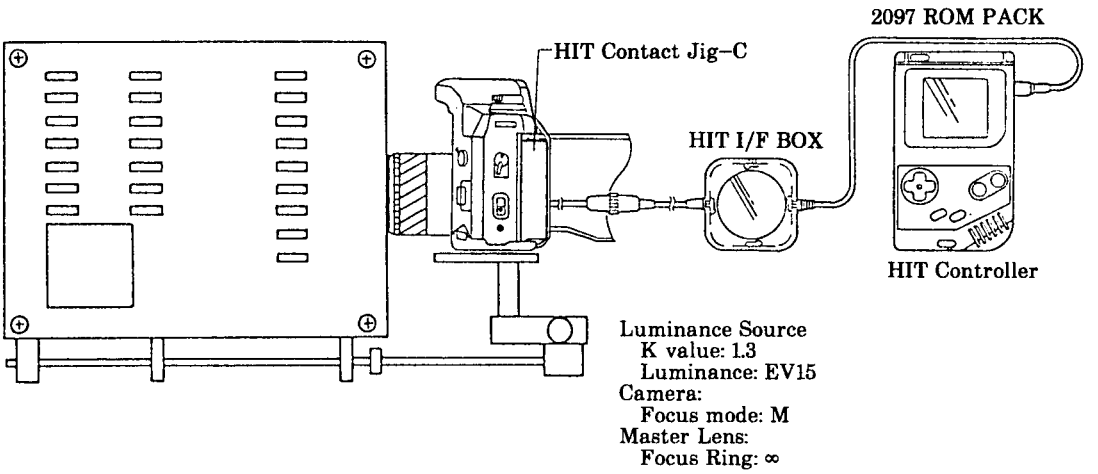

④EZ Adjustment

■Adjustment

1. Set up the HIT system and set camera and AF chart Ⅵ (*) as in Fig. 1.
   *Modification is necessary. See page 53.
2. Select "AF ADJ." in main menu using Control Pad, and press SELECT Button.
3. Select "EZ ADJ." in AF adjustment menu using Control Pad, and press SELECT Button.
4. Looking through the viewfinder, align the indicated point of Focus Frame (Fig. 1) with "A" on the AF chart Ⅵ . Then press SELECT Button.
5. Press and hold Shutter–Release Button partway down until "S1 OFF" appears.
6. Repeat procedure 5. Next measuring point appears in the HIT Controller.
7. Repeat procedure 4 to 6 for each measuring point "A" to "H". Then replace AF Chart Ⅵ with AF Chart Ⅴ .
8. Repeat procedure 4 to 6 for each measuring point "I" to "L". "COMPLETE" appears when all measuring points are adjusted.
9. Press SELECT Button. Displays are replaced with the AF adjustment menu.

■Check

10. Looking through the viewfinder, align the indicated point of Focus Frame (Fig. 1) with "E" on the AF Chart Ⅵ .
11. Select "EZ CHECK" in the AF adjustment menu using Control Pad, and press SELECT Button.
12. Press Shutter–Release Button partway down. Readings for three islands appear. (Fig. 2)
    ※Check that all the readings are within 0±50.
13. Press SELECT Button. Displays are replaced with the AF adjustment menu.

Standard: 0±50

■Fig. 1

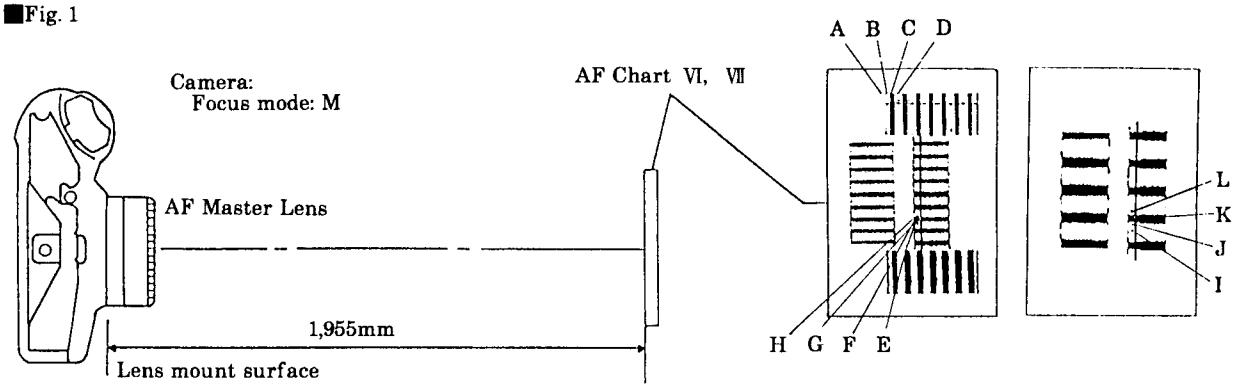

■Fig. 2

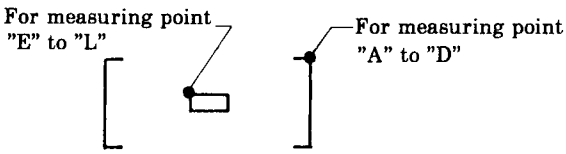

EZ CHECK

1 ISLAND +007
2 ISLAND +012
3 ISLAND −005
MENU

■Data Copy (included in Assist mode)

■Data Copy

- The Data Copy Mode, included in the Assist Mode of HIT system, makes adjustments easier after FPC–A Assy replacement by transferring data from original one to new one.

*See page 27 for adjustments and checks required after FPC–A Assy replacement using Data Copy Mode.

*The Data Copy Mode is not applicable to repairs for no activation which means the camera doesn't exchange data with HIT Controller.

■Equipments required

: HIT Controller
: 2097 ROM PACK
: HIT Contact Jig–C (Modification necessary; P. 53)
: HIT I/F Box

■Data copy

*Never turn HIT Controller off during data copy.

■From original FPC–A to HIT Controller (Before removing FPC–A)

1. Set up the equipments as in Fig. 1.
2. Select "ASSIST MODE" in main menu using Control Pad and press SELECT Button.
3. Select "DATA COPY" in assist mode menu using Control Pad and press SELECT Button.
4. Select "READ" using Control Pad and press SELECT Button.
5. Press Shutter–Release Button partway down. "DATA STORED" appears when the data is memorized in HIT Controller.
6. Press SELECT Button.

■From HIT Controller to new FPC–A (After installing FPC–A)

7. Select "WRITE" using Control Pad and press SELECT Button.
8. Press Shutter–Release Button partway down. "COMPLETE" appears when stored data is written to the new FPC–A.
9. Press SELECT Button. Displays are replaced with the assist mode menu.

■Fig. 1

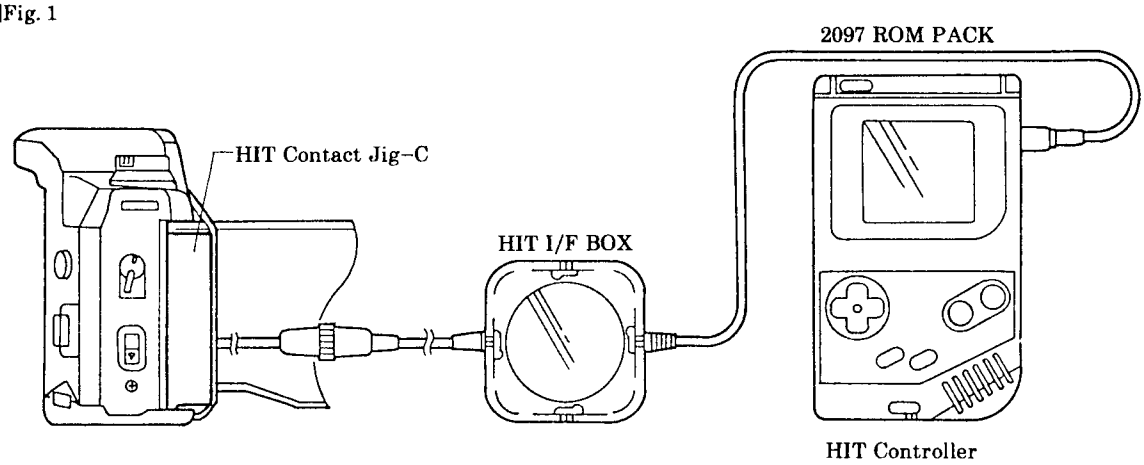

Error Code on HIT Controller

Error code list

Item	Error code	Meaning	Cause
B. C. lock voltage adjustment	10	Incorrect A/D Conversion value at battery check	• Voltage is wrongly set. • Wrong resistance of Power Supply Adapter • Defective resistor or transister for B.C. dummy current
AE adjustment	20	Picture frame (panorama/normal) is wrongly set.	• Picture frame (panorama/normal) is wrongly set. • Defective SPANO SW.
	21	Little difference between EV6 and EV15	• Luminance Source is wrongly set. • SPC disconnected.
Flash level adjustment	30	Incorrect flash level	• Lumiance Source is wrongly set. • SPC disconnected. • Reflection Paper isn't set. • Aperture operation failure
Pre–flash level adjustment	40	SFLD doesn't turn ON.	• Flash remains down. • SFLD disconnected.
Wireless flash level adjustment			
Aperture preset adjustment	51	Aperture pulse does not change.	• Defective Aperture Base Assy
EZ adjustment	61	Low contrast	• Chart is out of position. • Chart is too close/far. • Defective CCD.

■Tools & Instruments

■Luminance Source
<MODEL L-2101, L-2111, *L-222, *L-223>
■EE Tester <MODEL EE-2101, EE-2111>
■Shutter Tester <MODEL S-2201, S-2101>
■1000mm Collimator <MODEL RC- Ⅲ ,* Ⅱ ,* Ⅰ >
■Digital Multimeter <MODEL 2506A, 2508>
■DC Power Supply <*524B, *524C, MTR18-2>
■Strobe Tester <MODEL ST- Ⅳ, * Ⅲ >
■xi series PROGRAM/MAXXUM FLASH
■Master Lens <2072-0001-75>
■AF Master Lens <2072-0006-75>
■HIT Controller <7981-5001-01>
■2097 ROM PACK <7981-5001-66>
■HIT Contact Jig-C <7981-5001-13>
*Modification necessary (See P. 53.)
■HIT I/F BOX <7981-5001-32>
■HIT I/O Tester <7981-5001-03>
■AF Chart Ⅴ <2082-0001-75>
■AF Chart Ⅵ <2082-0002-75>
*Modification necessary (See P. 54.)
■AF Chart Ⅶ <2082-0003-75>
■SPC Chart <2082-0004-75>
■Preset Signal Adapter
■Body Signal Adapter (with x-contact)
■AEF Signal Adapter Ⅳ <7981-2014-34>
■X Cable <7981-2014-16>
■Guide No. Adjusting Jig <2082-0005-75>
■Mechanical Charge Jig <2082-2504-75>
■2CR5 Type Power Supply Adapter
<7981-1018-51>
■2CR5 Type Power Supply Adapter for
B.C. adjustment <7981-2203-02>
■Temporary Top Cover (See page 53.)
■REMORT CORD RC 1000S/RC 1000L
■AF Tripod Attachment Ⅱ <2072-0003-76>
■AF-Y.P Adjuster <2076-0006-75>
■Grip Ring <7983-9004-01>
■Mirror Remover <2071-5806-75>
■Mirror Positioner <2072-5151-75>
■Body Back Flat Plate A <7982-2004-01>
■Body Back Gauge <7982-2002-01>
■Dial Gauge <7982-2001-11>
■TORX L Wrench (T8) <7983-1032-01>
■Hexagon Bar Wrench (ϕ1.5)
■Hexagon Screwdriver <7983-1040-01>
■Reflection Paper <7981-3001-51>
■Spacer for Contact Jig-C <7985-5004-01>
■Flood Lamp (having color temperature of 2800 K)
■Film (Kodacolor GOLD 100, exposed in a room for more than one day)

(*Production ceased)

2097 ROM PACK <7981-5001-66>

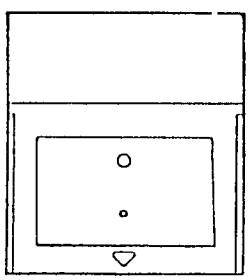

HIT I/O Tester <7981-5001-03>

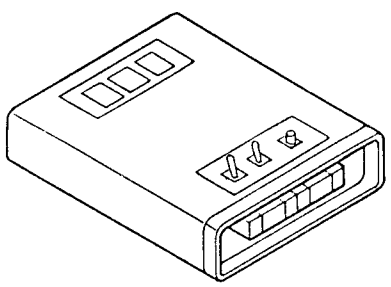

Spacer for Contact Jig-C
<7985-5004-01>

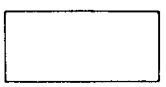

■Subsidiary materials

■Grease
: G-85 <7984-1085-01>

■Adhesive
: B-10 <7984-2010-01>
: B-50 <7984-2050-01>
: B-60 <7984-2060-01>

■Temporary Top Cover

■How to make a temporary top cover

- Modify Top Cover Assy for easier adjustment as follows.

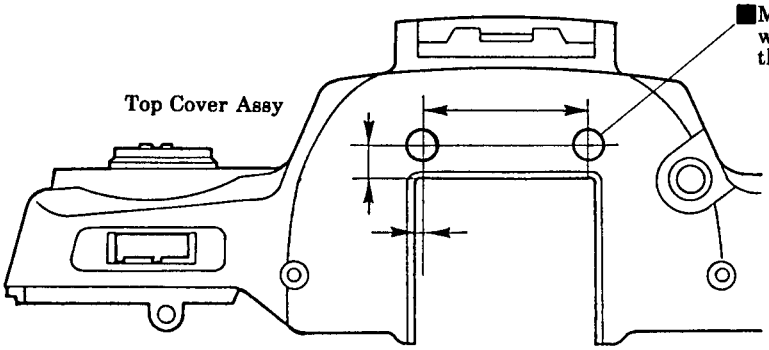

■Make two holes of 4mm diameter at the position where eccentric pins for SPC adjustment fit when the Top Cover is installed.

■HIT Contact Jig–C Modification

■Procedure

1. Loosen screws ① , ② , ③ and ④ and remove screw ⑤ to release the magic tape. (Fig. 1)
2. Position the magic tape so that it is stopped at the difference (Fig. 1) and 5mm off from the side of Cord Holder (Fig. 2).
3. Fasten the screws ① , ② , ③ and ④ temporarily.
4. Insert a tool such as a needle through screw hole for ⑤ to pierce the magic tape.
5. Install and fasten the screw ⑤ , and fasten other screws.
6. Affix Spacer #7985–5004–01 onto Probe Holder. (Fig. 1)

■Fig. 1

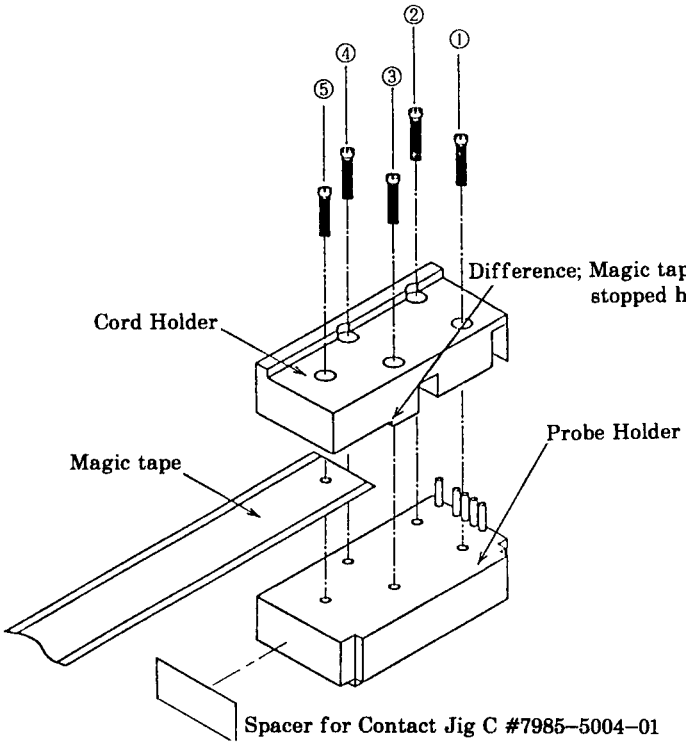

■Fig. 2

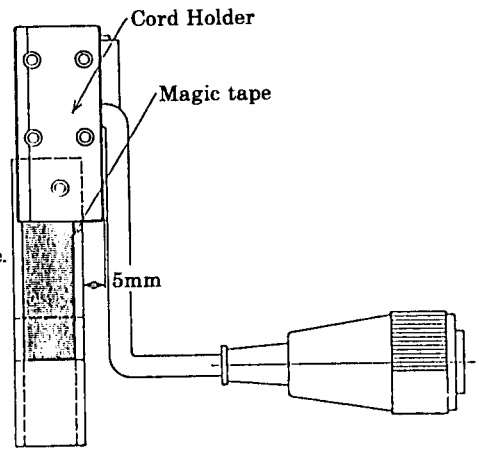

■AF Chart VI Modification

■Modify AF Chart VI #2082–0002–75 as follows.

1. Write a dot of 3mm diameter for each measuring point as in Fig. 1.
2. Write "A", "B", "C", and "D" on the left of the measuring points.

■Fig. 1

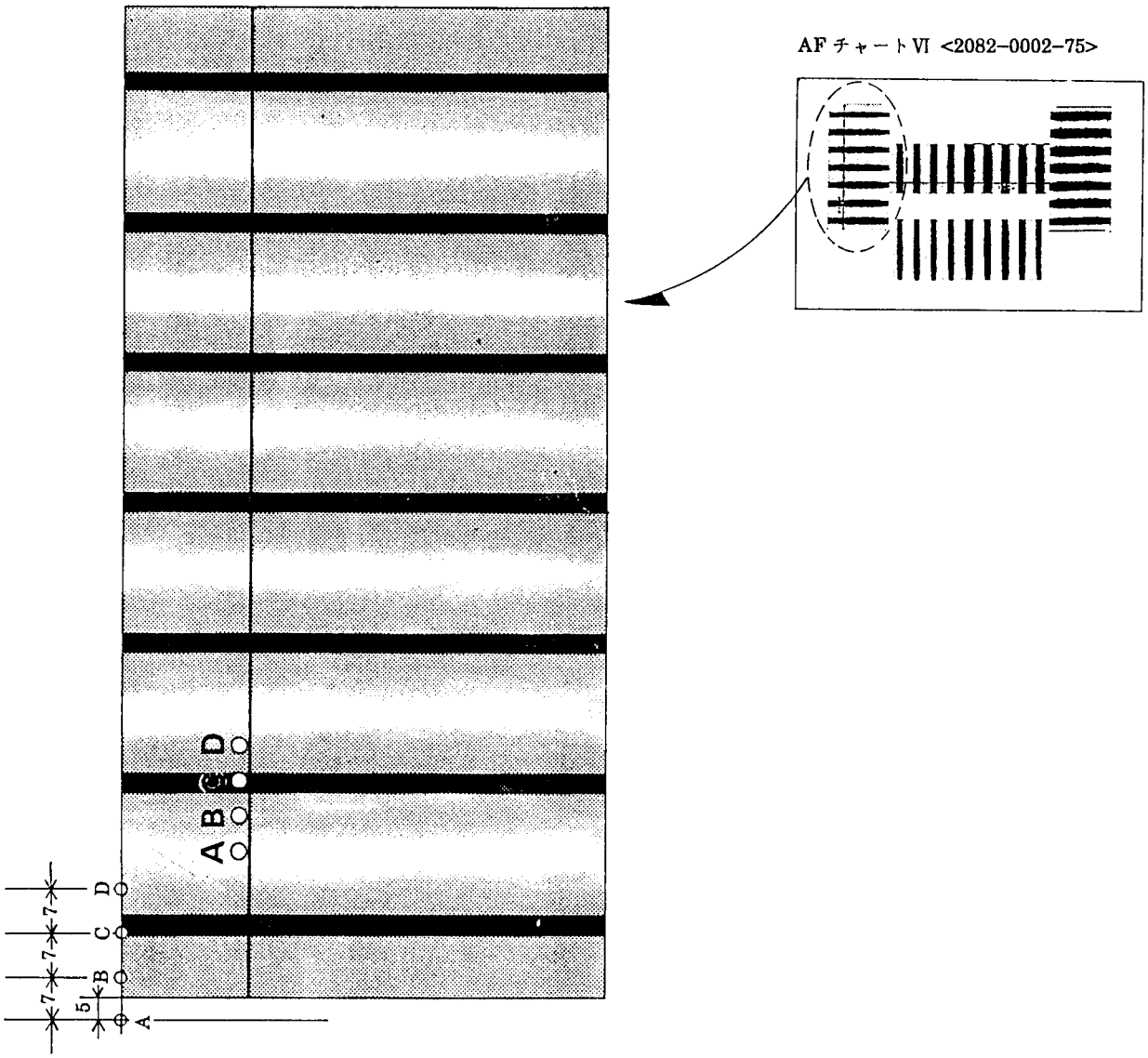

Check List

1. This CHECK LIST describes the quality of operation warranted to general users.
   When users inquire about quality or request inspection, refer to this CHECK LIST.
   Use this list also when checking operation after repair.
2. When using this list during shipping or receiving inspection, judge the quality according to purpose of the inspection, not by directly referring to this level.
3. For individual taste or special usage, some users may not be satisfied with this level of quality and will request a different one.
   In such cases, adjust the level as requested by them as much as possible.
4. Unless otherwise mentioned, use the standard lens #2550–100 or the master lens #2072–0001–75 for the following check.

Name of parts (Camera Body; DATE model)

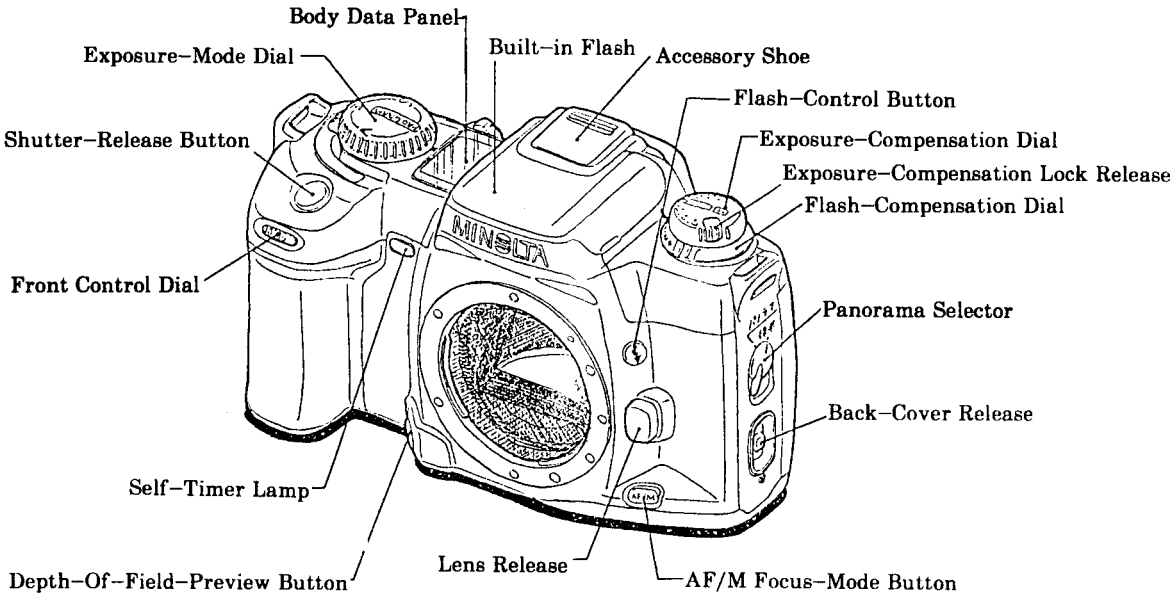

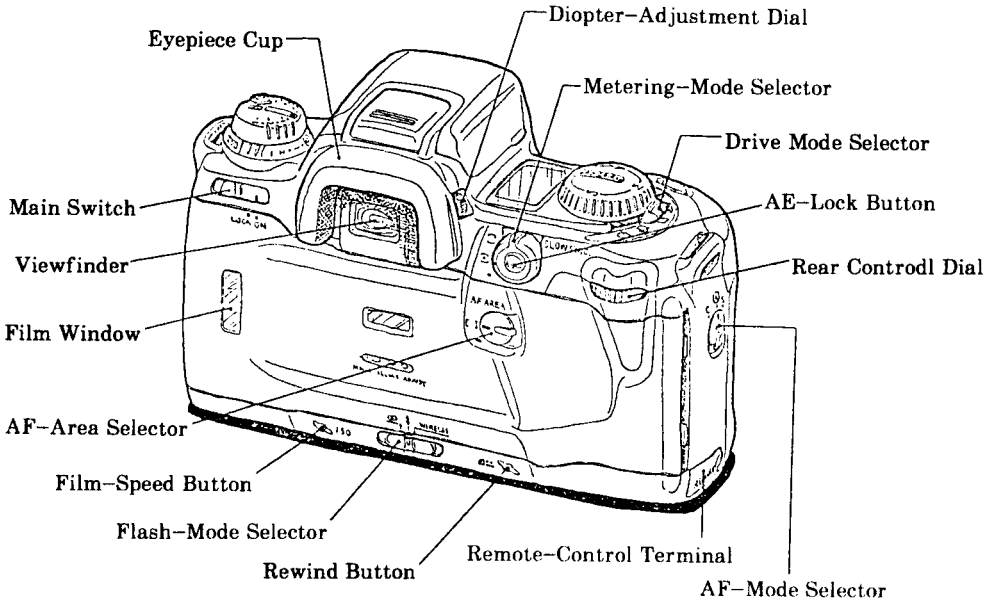

Name of parts (Data Panel and Viewfinder)

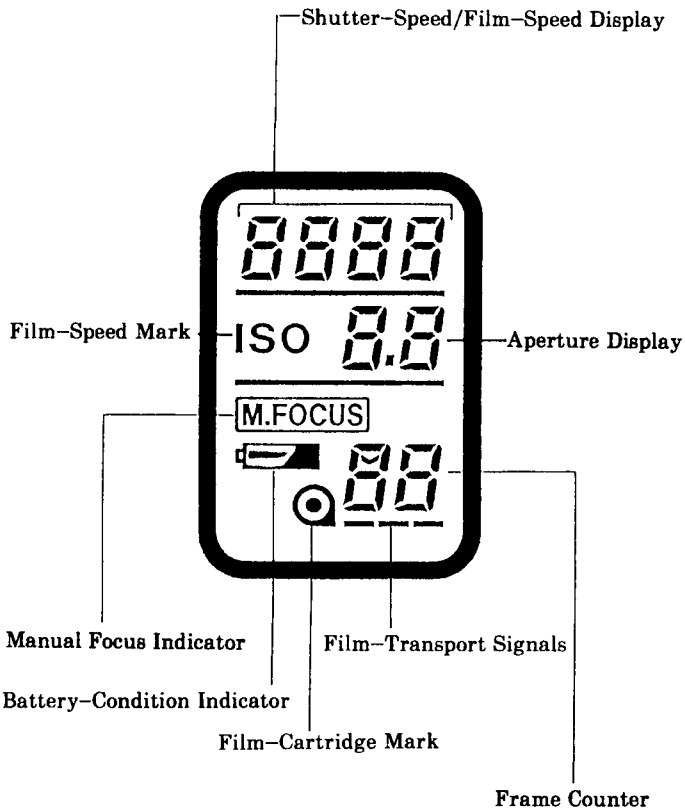

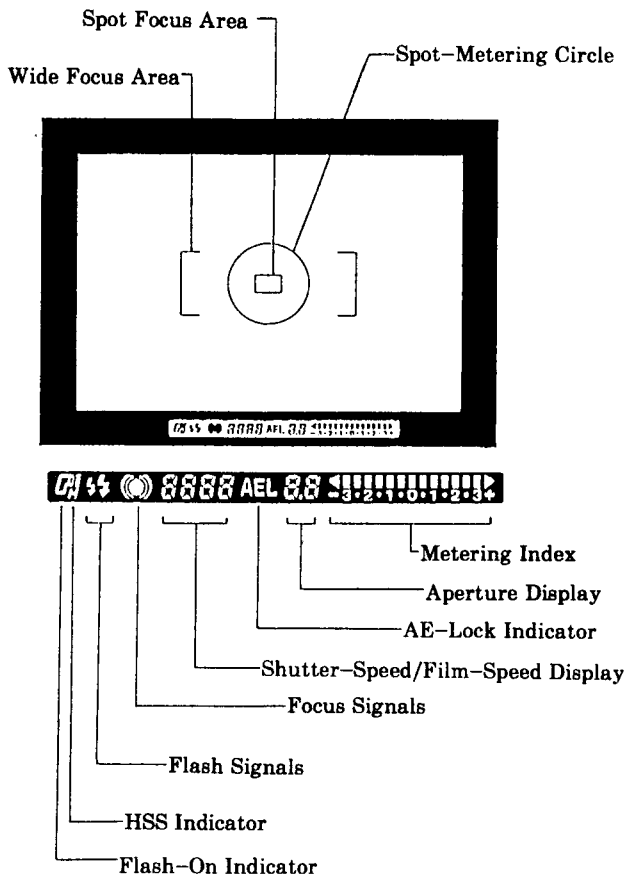

Initial setting

Main Switch ON

- By sliding Main Switch to on, camera and lens are reset as follows.

<Camera>

- Manual Focus Indicator appears if camera has been set to manual focus before the main switch was turned off.
- Battery Condition Indicator appears and stays for 4 sec. in Data Panel.
- Frame Counter shows number of exposed frames.

<Lens setting in AF mode>

- AF lens: Reset to a specific focus position after an infinity reset
- xi series lens: Reset to a specific focus position after a zoom wide end reset.

<Lens setting in manual focus mode>

- AF lens: Manual focus indicator remains in the Body Data Panel.
- xi series lens: Reset to zoom wide end, and Manual Focus Indicator remains.

Main Switch LOCK

- By sliding Main Switch to lock, all displays in Data Panel disappear.

<Lens setting in AF mode>

- AF lens: Reset to infinity position.
- xi series lens: Retracts to its shortest position.

<Lens setting in manual focus mode>

- AF lens: No reset
- xi series lens: Retracts to its shortest position.

Controls and operations

Exposure

Exposure mode

(P mode)
- By pressing Shutter–Release Button partway down, optimum shutter speed and aperture appear in Body and Viewfinder Data Panels.
- Shutter speed and aperture are automatically set.

(A mode)
- Aperture display stays in the Data Panels.
- Turning Front/Rear Control Dial will change the aperture setting in 0.5–stop increments.
- By pressing Shutter–Release Button partway down, optimum shutter speed appears in the Data Panels.
- Shutter speed is automatically set.

(S mode)
- Shutter speed display stays in the Data Panels.
- Turning Front/Rear Control Dial will change the shutter speed setting in 0.5–stop increments.
- By pressing Shutter–Release Button partway down, optimum aperture appears in the Data Panels.
- Aperture is automatically set.

(M mode)
- Shutter speed and aperture displays stay in the Data Panels.
- Turning Front Control Dial will change shutter speed setting in 0.5–stop increments.
- Turning Rear Control Dial will change aperture setting in 0.5–stop increments.
- By pressing Shutter–Release Button partway down, Metering Index (*) appears in Viewfinder Data Panel.

  *: Metering Index shows difference between your setting and camera metering.

■Indication for out of AE range

Exposure mode	Out of metering range	Out of control range
P	"◀ ▶" blinks on Metering Index	Shutter Speed and Aperture Displays blink
A		Shutter Speed Display blinks
S		Aperture Display blinks
M		-----

Metering mode

(14–segment honeycomb–pattern)
- Exposure is locked while focus is locked; While pressing and holding Shutter–Release Button partway down, shutter speed and aperture setting remain the same.
- Camera detects back–lit scenes; Flash fires in P mode when built–in flash is up.
- In MF (manual focus) mode, camera does not detect back–lit scenes.

(Centerweighted average)
- Exposure is not locked while focus is locked.
- Camera does not detect back–lit scenes.

(Spot)
- Exposure is not locked while focus is locked.
- Camera does not detect back–lit scenes.
- Only Spot Metering Circle is used for metering.

AE lock	• By pressing and holding AE Lock Button, AE Lock Indicator and Metering Index (*) appear in Viewfinder Data Panel. *Metering Index does not appear for flash photography. • With built–in flash up or dedicated flash on, slow shutter sync is available by pressing and holding AE Lock Button while pressing Shutter–Release Button.
Exposure compensation	• Turning Exposure Compensation Dial will set exposure compensation within ±3EV in 1/2–stop increments. • While metered shutter speed and/or aperture are held in data panels, turning Exposure Compensation Dial will change the shutter speed and aperture accordingly. *In M mode, the pointer on Metering Index changes according to Exposure Compensation Dial while manually set shutter speed and aperture stay still.
Flash compensation	• Turning Flash Compensation Dial will set flash compensation within ±2EV in 1/2–stop increments. • Regardless of amount of flash compensation, shutter speed and aperture do not change. • Flash output increases/decreases according to amount of flash compensation; Attached dedicated flash unit will change its subject distance display.
Film speed setting	• Pressing Film Speed Button and turning Front/Rear Control Dial will change film speed setting within ISO 6 to 6400 in 1/3–stop increments.

Film transport

Initial load	• When initial load is completed, "⊙___1" appears in Data Panel. • When initial load is failed, " _0 " appears blinking, and shutter is locked.
Rewind	• Film rewind starts automatically at the end of the roll. • During film rewind, number in Frame Counter decreases accordingly. • Pressing Rewind Button during rewind will make a high speed rewind. • When film rewind is completed, " 0 " is in the Frame Counter and " ⊙ " starts blinking.

Film transport time (Voltage: 5.8V, 0.6Ω; using power supply adapter)

(Advance)	• 1.8 frames/sec. (Continuous drive mode, SS 1/250, F5.6)
(Rewind)	• Normal: 16 sec. High speed: 8 sec. (Film: KODAK GOLD 100, 24–exp.)

Drive mode

(Single–frame advance)	• Pressing and holding Shutter–Release Button will release the shutter only one time. • In AF mode, shutter runs only after focus is confirmed.
(Continuous advance)	• Pressing and holding Shutter Release Button will release the shutter continuously (up to 2 frames/sec.). • In AF mode, shutter runs only after focus is confirmed.
(Self–timer)	• Focus and exposure are locked during countdown. • By pressing Shutter–Release Button, Self–Timer Lamp operates as follows: blinking at 2Hz (8 sec.) → blinking at 8Hz (1 sec.) → glowing (1 sec.) → shutter release
(Multiple exposure)	• Turning Front/Rear control Dial will set number of exposure from 2 to 9. • Shutter release is impossible while Drive Mode Selector is set to the multiple exposure. • Film doesn't advance until the last frame of number of exposure being set is exposed. • Multiple exposure is canceled by removing and reinstalling the battery or turning Front/Rear Control Dial to select OFF while Drive–Mode Selector point at multiple exposure.

(Exposure bracketing)
- Pressing and holding Shutter–Release Button will release the shutter continuously for 3 frames with a series of exposure; optimum → –0.5EV → +0.5EV.
- Exposure bracketing is canceled by letting Shutter–Release Button off.

(Flash bracketing)
- While built–in flash is up or dedicated flash unit is ON, pressing and holding Shutter–Release Button will release the shutter only for one time. Consecutive three shutter releases will make a series of exposure; optimum → –0.5EV → +0.5EV.
- Flash always fires even in P mode.
- By removing and reinstalling the battery or sliding Main Switch to OFF and ON will reset the number of flash bracketing exposure and "Fbr 1" appears in Data Panel.
- Flash bracketing is canceled by turning Drive Mode Selector or lowering the built–in flash.

Flash

Flash control
- When built–in flash is up or dedicated flash unit is on and charging, Flash On Indicator "⚡" appears in viewfinder.
- When flash charge is completed, Flash Signal " ⚡ " or "⚡⚡" (red–eye–reduction) appears in viewfinder.
- After a flash burst, Flash Signal " ⚡ " or "⚡⚡" blinks in 2Hz showing that the flash is controlled correctly.

P mode flash
- Flash fires automatically for low light and back–lit conditions.

  *Flash always fires in flash bracketing mode or wireless/remote flash control mode.

  *Flash does not fire for back lit in manual focus mode, centerweighted average or spot metering mode.
- Manual fill flash is available by pressing and holding Flash Control Button during shutter release.

A, S, M mode flash
- Flash always fires.

Flash mode

(Wireless flash)
- With a dedicated flash unit allowing wireless flash control is attached, sliding Flash Mode Selector to wireless will set the flash unit to wireless mode, and its flash channel is set to the camera.
- In wireless flash mode, Flash signal "⚡⚡" blinks alternately in 2Hz in viewfinder.
- In wireless flash mode, pressing the AE Lock Button will make a test burst on the off–camera flash unit in wireless flash mode.
- In wireless flash mode, wireless ratio control is available by pressing Flash Control Button during shutter release. (Built in flash : Off camera flash unit = 1 : 2)

(Red–eye–reduction)
- While Flash Mode Selector is set to "◎", flash will fire several short bursts just before the shutter release.

High speed sync. flash
- High speed sync. flash is available with the 8835.

■Flash control shutter speed

Exposure mode	Normal flash	Wireless flash	HSS
P A	Automatically set between 1/200 to 1/60 sec.	Automatically set to 1/60 sec.	Automatically set
S M	Manually set to 1/200 sec. or slower	Manually set to 1/60 sec. or slower	Manually set

Focusing

Focus mode	• Pressing Focus Mode Button will select autofocus or manual focus.
(Manual)	• Manual Focus Indicator appears in Data Panel. And AF coupler is disengaged.
(Autofocus)	• Manual Focus Indicator disappears. AF coupler is engaged, and lens is set to a specific focus position after an infinity reset.
AF area	• Turning AF Area Selector will select wide or spot focus area.
(Wide area)	• Focus is confirmed even for a subject at an edge of brackets (Wide Focus Area) in the viewfinder.
(Spot area)	• Focus is confirmed only for a subject in Spot Focus Area in the viewfinder.
AF mode	• Turning AF Mode Selector will select single shot, auto, or continuous AF.
(S: single shot)	• Focus is locked after confirmed.
(A: automatic selection)	• For a still subject, focus is locked after confirmed. For a moving subject, camera continues focusing the subject predicting its movements. • In continuous drive mode, continuous focus is selected on and after the second frame.
(C: continuous)	• Camera continues focusing a subject, and focus never be locked.
AF signals	■In AF mode " ● " light: Focus is locked. "((●))" light: Focus is confirmed (continuous focus). " ● " blink: Focus cannot be confirmed. ■In M mode " ● " light: Focus is confirmed. Nothing : Focusing " ● " blink: Focus cannot be confirmed.
AF illuminator	• In low contrast and low light condition, built–in flash fires a few small bursts to aid focus, or dedicated flash unit emits AF illuminator light. *No AF illuminator during the continuous AF mode.

Other functions

Depth–of–field–preview	• While pressing and holding Depth–Of–Field–Preview Button, aperture is stopped down to the set aperture. • Aperture setting cannot be changed while pressing and holding Depth–Of–Field–Preview Button. • Shutter release is available while pressing and holding Depth–Of–Field–Preview Button if focus is confirmed previously in AF mode. (AF does not operate while pressing the Depth Of Field Preview Button.)
Panorama (–600, –800)	• By turning Panorama Selector to panorama, picture frame and viewfinder are partially masked. • Data imprinting position changes for panorama frame.

Customized functions

AF illuminator on/off

- By pressing Film Speed and Flash Control Buttons simultaneously, "On AL" or "OFF AL"appears and stays in Data Panel.
  And pressing the Film–Speed Button will change the display;
  On AL: AF illuminator is on
  OFF AL: AF illuminator is off

Customized AE lock

- By pressing Film Speed and AE Lock Buttons simultaneously, "On" or "OFF" appears and stays in Data Panel. And pressing the Film–Speed Button will change the display;
  On: AE locked by pressing AE Lock Button once and unlocked by pressing the button again.
  OFF: AE locked while AE Lock Button is pressed and held.

Customized Metering Index

- By pressing Film Speed and Depth–Of–Field–Preview Buttons simultaneously, "On" or "OFF" appears and stays in Data Panel.
  And pressing the Film–Speed Button will change the display;
  On: Separate pointer appears for amount of exposure compensation.
  OFF: Separate pointer does not appear for amount of expoure compensation.

Service customized function (F-- release lock on/off)

*Be sure to remove the lens before operate as follows.

- By sliding Main Switch from LOCK to ON while pressing and holding Film–Speed Button and Lens Release simultaneously, "On" or "OFF" appears in Data Panel depending on the setting.
  On: Shutter can be released when film is loaded and no lens is attached.
  OFF: Shutter is locked when film is loaded and no lens is attached.

Standards

AE level
(manual shutter speed) *Using Shutter Tester (MODEL S 2210/S 2101). See page 32 of Repair Guide for exposure difference.

Shutter speed	Standard (ms)	Allowable range (ms)	Allowable range (EV)	Exposure difference
1/4000	0.244	0.167 – 0.357	±0.45EV	See page 32 of Repair Guide.
1/2000	0.488	0.357 – 0.667		
1/1000	0.977	0.740 – 1.289	±0.3EV	
1/500	1.95	1.59 – 2.40		
1/250	3.91	3.17 – 4.81		
1/200	5.00	3.80 – 6.17		
1/125	7.81	6.35 – 9.62		
1/600	15.6	12.7 – 19.2		
1/30	31.3	29.2 – 33.5		
1/15	62.5	58.3 – 70.0		
1/8	125	117 – 134		
1/4	250	233 – 268		
1/2	500	467 – 536		

X–sync delay time

Shutter speed	Measured item	Standard
1/200	X contact delay time	0.35ms or more
	From X contact on to 2nd curtain appearance	1.45ms or more

*See page 33 of Repair Guide.

AE level (automatic)

*Using standard lens (2550–100), film (ISO100), EE Tester (K value: 1.3)

Exposure mode	Shutter speed	Aperture	Luminance	Allowable range
P	---	---	EV15 EV12 EV10 EV6 EV4	Within 0±1.0EV
A	---	F5.6 F1.7 F5.6 F22 F5.6	EV15 EV10 EV10 EV10 EV6	
S	1/1000 1/250 1/30 1/8 1	---	EV15 EV10 EV10 EV10 EV6	

Flash level

*Using ISO 100 film

Within F5.6±0.5EV

*See page 35 of Repair Guide.

Current leak

*Using 2CR5 type power supply adapter (5.8V, 0.6Ω)

Measured item	Allowable range
Main Sw. OFF	~~10~~ 30 μA or less
Main Sw. ON	~~50~~ 60 μA or less

B.C. lock voltage

*Using 2CR5 type power supply adapter for B.C. adjustment (5.8V, 1.1Ω)

4.7V or less

*See page 44 of Repair Guide.

Body back

44.700mm±0.020mm

INDEX

PART NO.	PAGE
2089-0104	3
2097-0105	9
2097-0106	9
2097-0108	9
2097-0109	11
2097-0110	10
2096-0114	10, 11
2097-0118	10
2089-0120	1
2089-0121	1
2097-0124	11
2097-0131	12
2097-0133	12
2097-0135	12
2097-0138	12
2097-0139	1
2089-0141	4
2085-0145	13
2092-0147	9, 13
2082-0150	7
2097-0152	7
2097-0160	12
2097-0162	12
2097-0163	12
2097-0164	12
2097-0165	12
2097-0167	12
2097-0170	4
2097-0172	1
2089-0181	4
2097-0183	4
2097-0201	5
2082-0245	7
2097-0250	8
2097-0260	8
2097-0277	8
2092-0278	8
2097-0310	3
2089-0314	3
2081-0330	3
2097-0401	5
2089-0402	8
2097-0404	4
2097-0413	3
2097-0418	12
2097-0428	1
2097-0469	2
2097-0472	1
2097-0500	7, 8
2089-0512	8
2089-0524	7
2097-0545	7
2097-0581	5
2097-0585	5
2097-1006	9
2097-1007	1
2097-1008	1
2097-1009	1
2072-1010	7
2076-1011	7
2089-1011	4
2078-1023	1
2097-1035	5
2089-1051	3
2089-1053	3
2089-1055	3
2097-1060	1
2005-1061	7
2075-1062	2, 5
2005-1062	7
2005-1063	7
2078-1072	3
2078-1073	3
2082-1083	4
2085-1087	4
2089-1110	10, 11
2082-1111	10, 11
2076-1114	10, 11
2081-1115	10, 11
2082-1116	10, 11
2089-1118	10, 11
2089-1119	10, 11
2081-1120	10, 11
2089-1152	1, 5
2089-1166	11
2089-1205	1
0485-1210	11
2082-1211	4
2082-1212	4
2097-1213	4
2419-1292	11
2097-1312	9
2097-1316	5
2097-1318	1
2097-1319	1
2097-1340	13
2097-1362	2
2097-1401	5
2097-1402	12
2097-1412	1
2097-1414	4
2077-1418	12
2097-1421	9
2097-1422	9
2089-1424	1
2089-1425	1
2097-1427	1
2097-1431	9
2097-1432	10, 11
2097-1433	9
2097-1434	9
2097-1435	9
2092-1438	5
2097-1442	13
2077-1443	13
2097-1444	13
2089-1450	2

INDEX

PART NO.	PAGE
2076-1453	13
2089-1454	13
2089-1462	9, 13
2089-1466	9, 13
2097-1467	13
2092-1469	13
2097-1470	9
2097-1474	12
2097-1477	12
2097-1479	12
2089-1480	9
2097-1480	12
2097-1483	12
2097-1484	12
2097-1485	12
2097-1488	13
2097-1489	12
2089-1489	9
2097-1490	12
2097-1491	13
2097-1492	13
2097-1493	13
2097-1494	13
2097-1495	13
2097-1496	12
2097-1498	12
2097-1499	12
2085-1515	7
2082-1520	7
2089-1521	2
2089-1523	2
2089-1525	2
2082-1528	7
2082-1529	7
2097-1530	7
2089-1534	2
2089-1535	2
2089-1536	2
2089-1541	9
2089-1543	9
2089-1547	7
2097-1601	12
2089-1602	12
2097-1604	12
2089-1607	12
2089-1609	12
2089-1610	12
2089-1611	12
2089-1613	12
2089-1616	13
2089-1618	1
2089-1619	13
2089-1620	12
2089-1621	12
2084-1622	12
2097-1765	9
2097-1766	9
2097-1801	10, 11
2082-2005	2
2082-2549	7
2082-2550	7
2082-2553	7
2077-2616	8
2082-2619	8
2092-2705	8
2092-2706	8
2092-2710	8
2092-2721	8
2097-2723	8
2097-3021	3
2082-3022	3
2082-3027	3
2082-3316	3
2082-3317	3
2082-3318	3
2082-3319	3
2089-3320	3
2089-3401	4
2089-3402	4
2082-3414	3
2097-4003	3
2097-4009	13
2097-4010	2
2097-4014	5
2097-4016	2
2097-4017	5
2097-4042	10, 11
2097-4201	5
2092-4202	5
2097-4206	5
2097-4208	5
2094-4261	11
2097-4401	14
2097-4441	14
2097-4442	14
2097-4443	14
2097-4444	14
2089-4501	5
2089-4502	5
2089-4503	5
2082-4507	1
2089-4507	4
2082-4508	1
2089-4508	1
2084-4509	2
2089-4509	4
2084-4510	2
2076-4902	14
2097-5002	6
2097-5008	6
2097-5012	6
2097-5017	6
2082-5020	5

INDEX

PART NO.	PAGE
2089-5025	6
2082-5025	5
2089-5026	6
2089-5027	6
2089-5028	6
2089-5029	6
2089-5030	6
2072-5038	6
2097-5040	5
2081-5041	1
2081-5045	1
2089-5051	8
2089-5052	8
2082-5054	8
2097-5075	6
2097-5111	8
2089-5154	8
2097-5158	5, 6
2097-5803	6
2097-5805	6
2082-5806	8
2082-5809	5
2097-5811	6
2092-5813	5
2097-5815	5
2097-5816	5
2097-5817	5
2097-5819	6
2097-5820	6
2082-9102	5
2082-9103	5
2089-9120	1
2097-9121	9
9332-1061-01	13
9333-2462-01	3
9383-1363-30	5
9384-2190-50	2, 3, 4, 5, 11, 12, 13
9384-2191-00	1, 4, 10, 11
9384-2290-90	1, 2, 3, 8, 13
9384-2391-30	1, 5, 6
9384-2590-50	2, 5
9391-0807-00	14
9391-0807-01	14
9391-0807-02	14
9391-0807-03	14
9391-0807-04	14
9391-0807-05	14
9391-0807-06	14
9391-0807-07	14
9391-0807-08	14
9391-0807-09	14
9611-1625-07	5
9721-0120-50	9
9721-0150-50	9, 12
9747-1700-06	1
9747-1730-07	7, 12
9747-1735-06	11
9747-1735-07	2, 4,12, 13
9747-1740-06	1
9747-1740-07	5, 7, 9, 10
9747-1745-06	11
9747-1745-07	1, 2, 5, 7, 8, 12
9747-1750-06	1
9747-1750-07	4
9747-1760-01	8
9747-1760-06	1
9747-1760-07	2, 13
9747-1765-07	1
9747-1780-06	1
9747-1780-07	2
9748-1730-07	12
9748-1735-07	5
9748-1740-07	3
9749-1725-01	1
9749-1735-07	9, 10, 11, 13
9749-1745-01	2, 12
9749-1755-01	1
9758-0150-00	12
9758-0200-00	9, 13
9761-1435-07	12
9761-1450-07	12
9761-1728-07	8
9761-1730-07	9, 13
9761-1735-07	5
9761-1740-07	3
9761-1750-07	7
9761-1780-07	1
9761-2045-01	3
9761-2060-01	2
9761-2060-04	7
9761-2080-07	2
9762-1470-01	3
9762-1740-07	3
9762-1755-01	4
9762-1755-07	6
9762-2050-01	1, 3, 13
9762-2060-07	1, 13
9762-2080-07	2
9790-1830-40	5
9791-1830-40	5

1 (2097)A

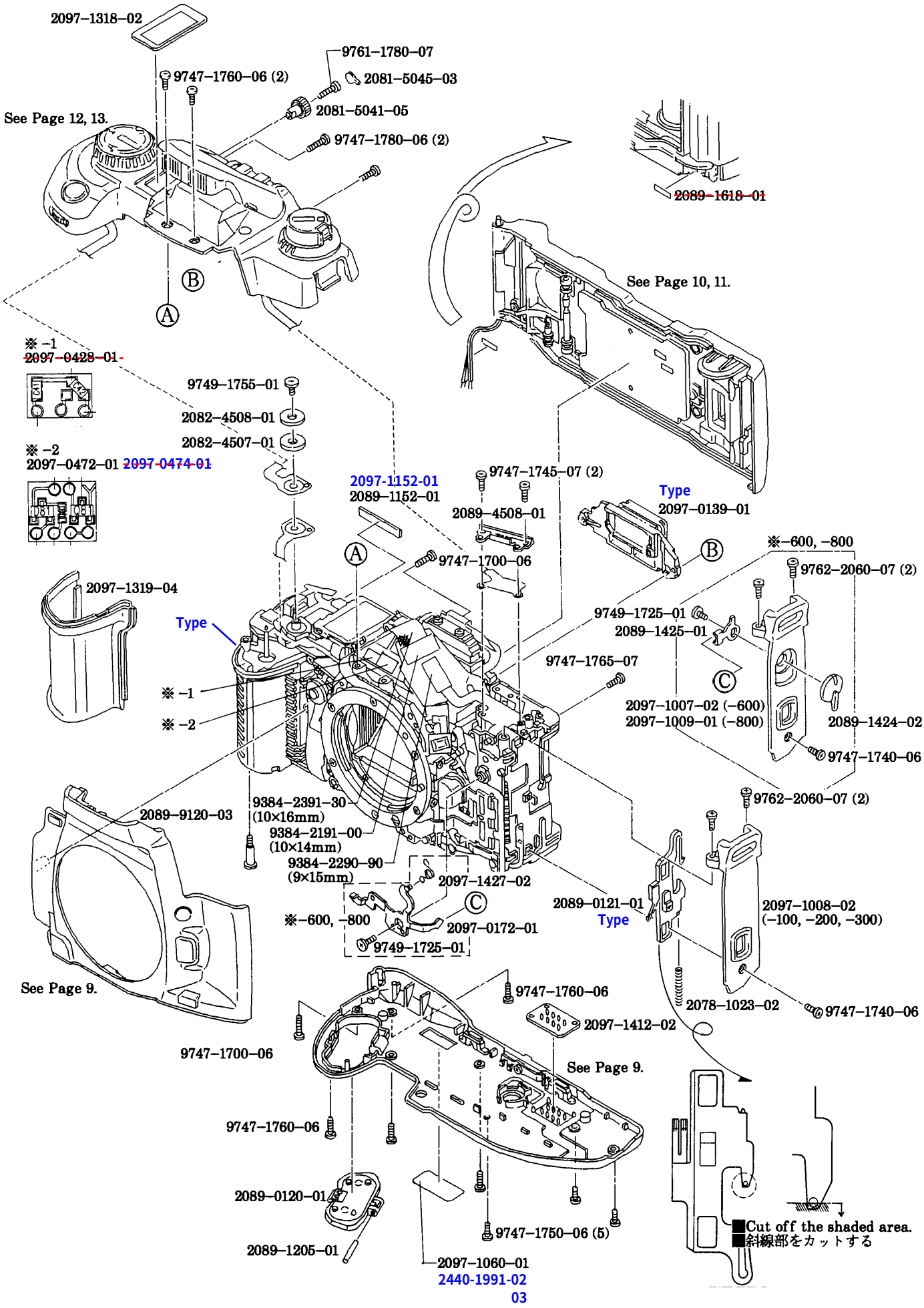
2097–1318–02
9761–1780–07
9747–1760–06 (2)
2081–5045–03
2081–5041–05
See Page 12, 13.
9747–1780–06 (2)
2089–1618–01
See Page 10, 11.
※ –1
2097–0428–01
9749–1755–01
2082–4508–01
2082–4507–01
※ –2
2097–0472–01 2097–0474–01
2097-1152-01
2089–1152–01
9747–1745–07 (2)
2089–4508–01
Type
2097–0139–01
※–600, –800
9762–2060–07 (2)
9747–1700–06
2097–1319–04
Type
9749–1725–01
2089–1425–01
9747–1765–07
※ –1
※ –2
2097–1007–02 (–600)
2097–1009–01 (–800)
2089–1424–02
9747–1740–06
9762–2060–07 (2)
2089–9120–03
9384–2391–30
(10×16mm)
9384–2191–00
(10×14mm)
9384–2290–90
(9×15mm)
2097–1427–02
2089–0121–01
Type
2097–1008–02
(–100, –200, –300)
※–600, –800
2097–0172–01
9749–1725–01
See Page 9.
9747–1760–06
2078–1023–02
9747–1740–06
2097–1412–02
9747–1700–06
See Page 9.
9747–1760–06
2089–0120–01
9747–1750–06 (5)
2089–1205–01
2097–1060–01
2440-1991-02
03
■Cut off the shaded area.
■斜線部をカットする

PART NO.	PART NAME		QTY.
2089-0120-01	BATTERY COVER UNIT	電池蓋セット	1
2089-0121-01	BACK-COVER RELEASE UNIT	裏蓋ロックレバーセット	1
2097-0139-01	EYEPIECE FRAME ASSY	接眼枠セット	1
2097-0172-01	PANORAMA COUPLING LEVER ASSY (-600, -800)	パノラマ連動レバーセット	1
~~2097-0428-01~~	PCB-X ASSY	X基板セット	1
~~2097-0472-01~~	PCB-Y ASSY	Y基板セット	1
~~2097-0474-01~~	PCB-Y ASSY	Y基板セット	1
2097-1007-02	BACK-COVER RELEASE COVER (-600)	裏蓋ロックカバー	1
2097-1008-02	BACK-COVER RELEASE COVER (-100, -200, -300)	裏蓋ロックカバー	1
2097-1009-01	BACK-COVER RELEASE COVER (-800)	裏蓋ロックカバー	1
2078-1023-02	LOCK SP	裏蓋ロックSP	1
*2097-1060-01	SERIAL NUMBER PLATE	ボディNO．銘板	1
*2440-1991-02	SERIAL NUMBER PLATE	ボディNO．銘板	1
2440-1991-03	SERIAL NUMBER PLATE	ボディNO．銘板	1
*2089-1152-01	DUST-PROOF SHEET	防塵シート	1
2097-1152-01	DUST-PROOF SHEET	防塵シート	1
2089-1205-01	BATTERY COVER AXIS	電池蓋軸	1
2097-1318-02	LCD WINDOW	LCD窓	1
2097-1319-04	GRIP COVER	グリップカバー	1
2097-1412-02	INSULATION RUBBER	絶縁ゴム	1
2089-1424-02	PANORAMA SWITCH (-600, -800)	パノラマ切換レバー	1
2089-1425-01	PANORAMA OPERATION LEVER (-600, -800)	パノラマ可動レバー	1
2097-1427-02	PANORAMA SWITCHOVER SP (-600, -800)	パノラマ切り換えSP	1
*2089-1618-01	SFL CONTACT SPACER	SFL接片スペーサー	1
2082-4507-01	A-C-K RUBBER CONNECTOR	A－C－Kコネクターゴム	1
2082-4508-01	A-C-K CONNECTOR PRESSURE	A－C－Kコネクター押え板	1
2089-4508-01	CONNECTOR HOLDER-A	コネクター押え板A	1
2081-5041-05	DIOPTER ADJUSTMENT DIAL	視度調ダイヤル	1
2081-5045-03	DIOPTER ADJUSTMENT NAME PLATE	視度調銘板	1
2089-9120-03	SCREW	ねじ	1
9384-2191-00	DOUBLE-FACED TAPE (PER ROLL)	両面テープ	1
9384-2290-90	POLYESTER TAPE (PER ROLL/60M)	ポリエステルテープ	1
9384-2391-30	ACETATE TAPE (PER ROLL)	アセテートクロステープ	1
9747-1700-06	SCREW	ねじ	2
9747-1740-06	SCREW	ねじ	1
9747-1745-07	SCREW	ねじ	2
9747-1750-06	SCREW	ねじ	5
9747-1760-06	SCREW	ねじ	4
9747-1765-07	SCREW	ねじ	1
9747-1780-06	SCREW	ねじ	2
9749-1725-01	SCREW	ねじ	2
9749-1755-01	SCREW	ねじ	1
9761-1780-07	SCREW	ねじ	1
9762-2060-07	SCREW	ねじ	2

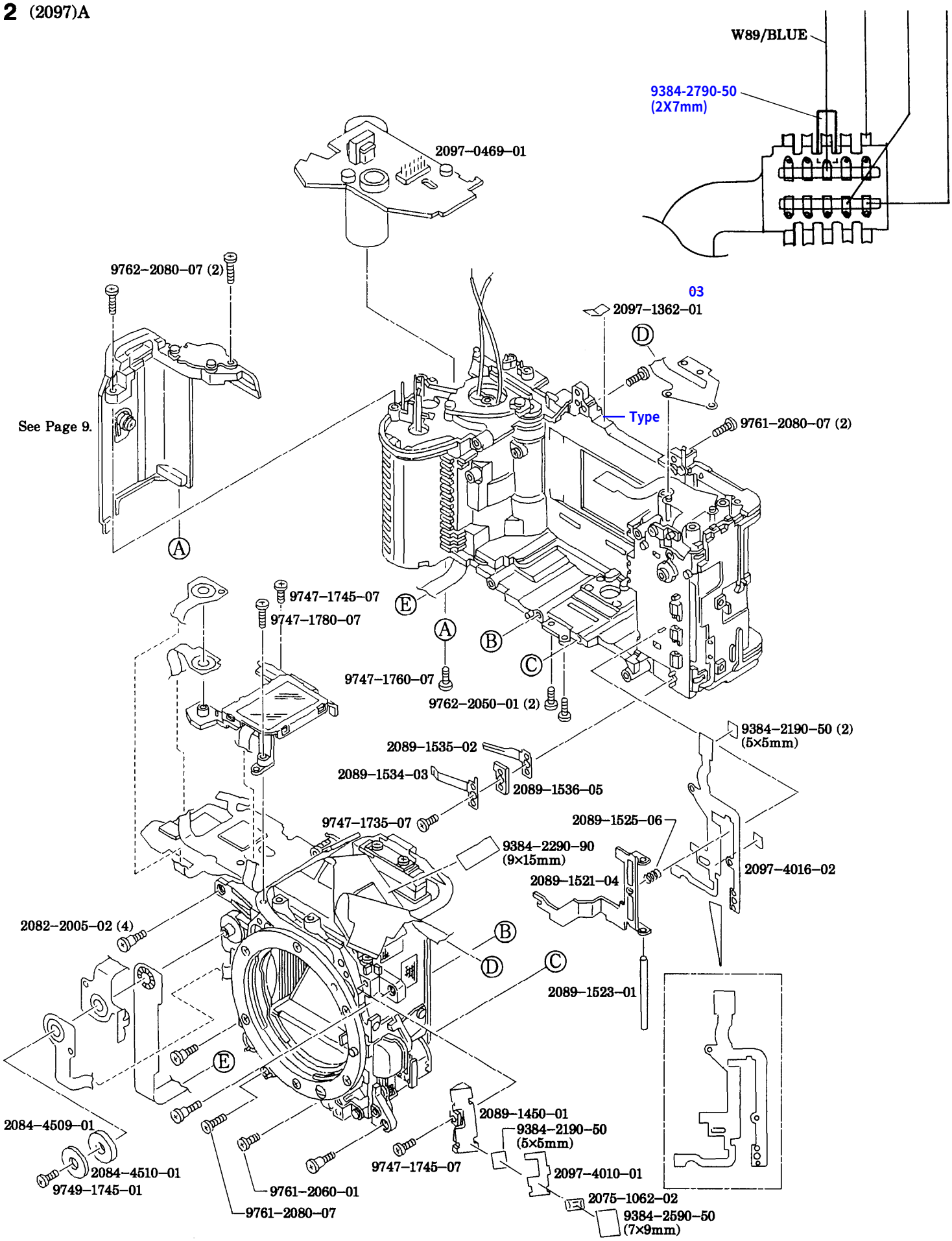
W89/BLUE
9384-2790-50
(2X7mm)
2097-0469-01
9762-2080-07 (2)
03
2097-1362-01
D
See Page 9.
Type
9761-2080-07 (2)
A
9747-1745-07
9747-1780-07
E
A
B
C
9747-1760-07
9762-2050-01 (2)
9384-2190-50 (2)
(5×5mm)
2089-1535-02
2089-1534-03
2089-1536-05
9747-1735-07
2089-1525-06
9384-2290-90
(9×15mm)
2097-4016-02
2089-1521-04
2082-2005-02 (4)
B
D
C
2089-1523-01
E
2089-1450-01
2084-4509-01
9384-2190-50
(5×5mm)
2084-4510-01
9747-1745-07
2097-4010-01
9749-1745-01
9761-2060-01
2075-1062-02
9761-2080-07
9384-2590-50
(7×9mm)

PART NO.	PART NAME		QTY.
2097-0469-01	FLASH CONVERTER PCB ASSY	フラッシュコンバーター基板セット	1
2075-1062-02	OVER RIDE CONTACT	オーバーライド接片	1
*2097-1362-01	LIGHT SHIELD SHEET	遮光シート	1
*2097-1362-03	LIGHT SHIELD SHEET	遮光シート	1
2089-1450-01	EXPOSURE-COMPENSATION BUTTON BASE	＋／－釦台	1
2089-1521-04	COUPLER LEVER	カプラーレバー	1
2089-1523-01	COUPLER LEVER AXIS	カプラーレバー軸	1
2089-1525-06	COUPLER LEVER SP	カプラーレバーSP	1
2089-1534-03	SRAF. CONTACT-A	SRAF接片A	1
2089-1535-02	SRAF. CONTACT-B	SRAF接片B	1
2089-1536-05	SRAF. CONTACT SPACER	SRAF接片スペーサー	1
2082-2005-02	SCREW	ねじ	4
2097-4010-01	FPC-J	Jフレキ	1
2097-4016-02	FPC-P	Pフレキ	1
2084-4509-01	RUBBER CONNECTOR	コネクターゴム	1
2084-4510-01	CONNECTOR PRESSURE	コネクター押さえ板	1
9384-2190-50	DOUBLE-FACED TAPE (PER ROLL)	両面テープ	3
9384-2290-90	POLYESTER TAPE (PER ROLL/60M)	ポリエステルテープ	1
9384-2590-50	MENDING TAPE (1R/50M)	メンディングテープ	1
9384-2790-50	FILM TAPE	フィルムテープ	1
9747-1735-07	SCREW	ねじ	1
9747-1745-07	SCREW	ねじ	2
9747-1760-07	SCREW	ねじ	1
9747-1780-07	SCREW	ねじ	1
9749-1745-01	SCREW	ねじ	1
9761-2060-01	SCREW	ねじ	1
9761-2080-07	SCREW	ねじ	3
9762-2050-01	SCREW	ねじ	2
9762-2080-07	SCREW	ねじ	2

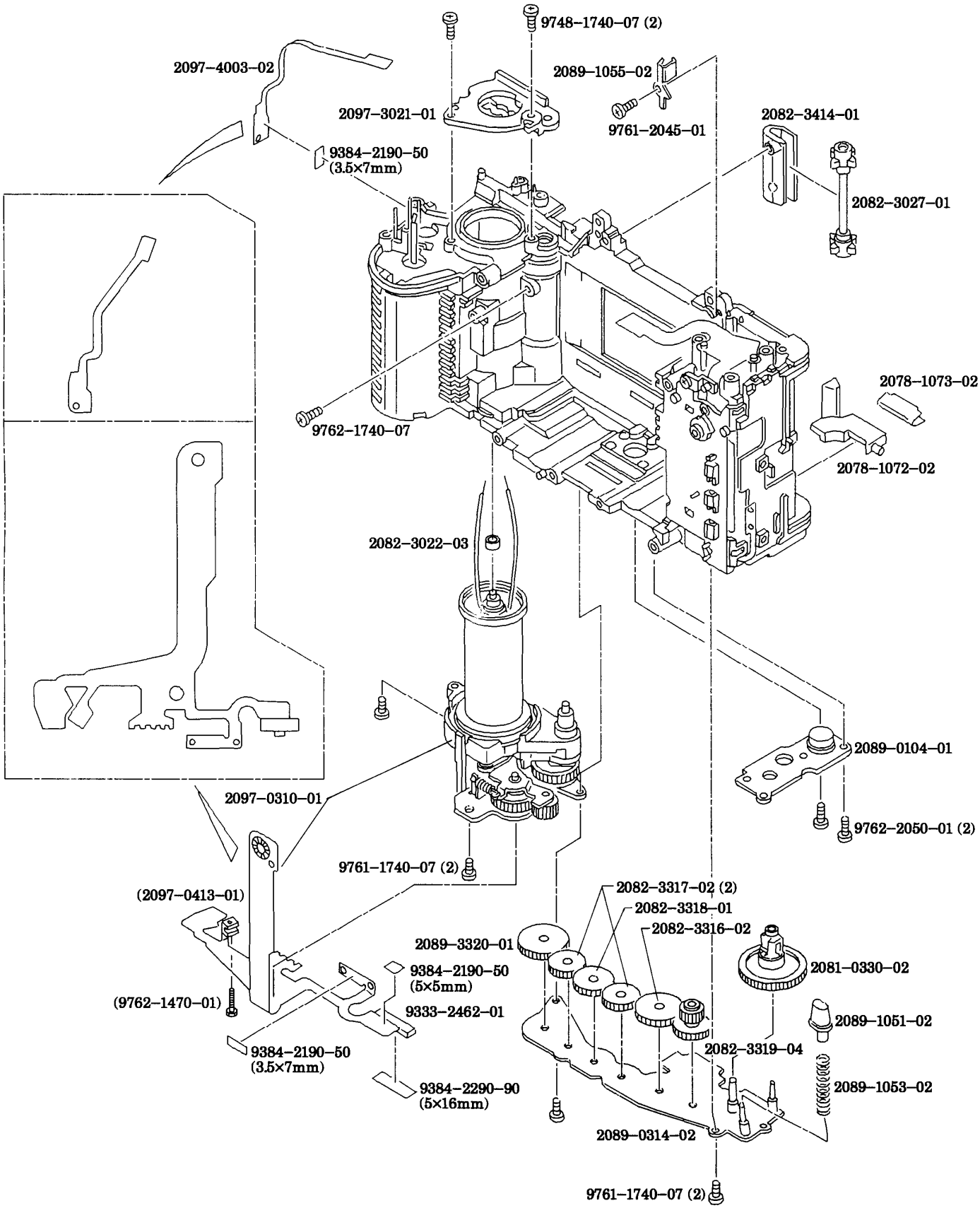
9748-1740-07 (2)
2097-4003-02
2089-1055-02
2097-3021-01
9761-2045-01
2082-3414-01
9384-2190-50
(3.5×7mm)
2082-3027-01
2078-1073-02
9762-1740-07
2078-1072-02
2082-3022-03
2089-0104-01
2097-0310-01
9762-2050-01 (2)
9761-1740-07 (2)
(2097-0413-01)
2082-3317-02 (2)
2082-3318-01
2082-3316-02
2089-3320-01
2081-0330-02
9384-2190-50
(5×5mm)
(9762-1470-01)
9333-2462-01
2089-1051-02
9384-2190-50
(3.5×7mm)
2082-3319-04
2089-1053-02
9384-2290-90
(5×16mm)
2089-0314-02
9761-1740-07 (2)

PART NO.	PART NAME		QTY.
2089-0104-01	TRIPOD BASE PLATE UNIT	三脚台板セット	1
2097-0310-01	WINDING BASE PLATE ASSY	巻き上げ台板セット	1
(2097-0413-01)	FPC-M ASSY	Mフレキセット	1
(9762-1470-01)	SCREW	ねじ	1
2089-0314-02	REWIND BASE PLATE UNIT	巻戻し台板セット	1
2081-0330-02	REWIND FORK GEAR SET	巻戻しフォークセット	1
2089-1051-02	FILM PUSH UP LEVER	パト押上レバー	1
2089-1053-02	FILM PUSH UP SP	パト押上SP	1
2089-1055-02	GROUND PLATE	ラグ板	1
2078-1072-02	FILM CARTRIDGE RECEIVER	パト口金受け	1
2078-1073-02	CARTRIDGE RECEIVER SP	口金受回転SP	1
2097-3021-01	MOTOR HOLDER	モーター保持台	1
2082-3022-03	MOTOR RUBBER HOLDER	モーター保持ゴム	1
2082-3027-01	SPROCKET	スプロケット	1
2082-3316-02	REWIND GEAR-B	巻戻しギヤB	1
2082-3317-02	REWIND GEAR-C	巻戻しギヤC	2
2082-3318-01	REWIND GEAR-D	巻戻しギヤD	1
2082-3319-04	REWIND GEAR-F	巻戻しギヤF	1
2089-3320-01	REWIND GEAR-G	巻戻しギヤG	1
2082-3414-01	FILM GUIDE PLATE	フィルムガイド板	1
2097-4003-02	FPC-C	Cフレキ	1
9333-2462-01	SWITCH	スイッチ	1
9384-2190-50	DOUBLE-FACED TAPE (PAR ROLL)	両面テープ	3
9384-2290-90	POLYESTER TAPE (PER ROLL/60M)	ポリエステルテープ	1
9748-1740-07	SCREW	ねじ	2
9761-1740-07	SCREW	ねじ	4
9761-2045-01	SCREW	ねじ	1
9762-1740-07	SCREW	ねじ	1
9762-2050-01	SCREW	ねじ	2

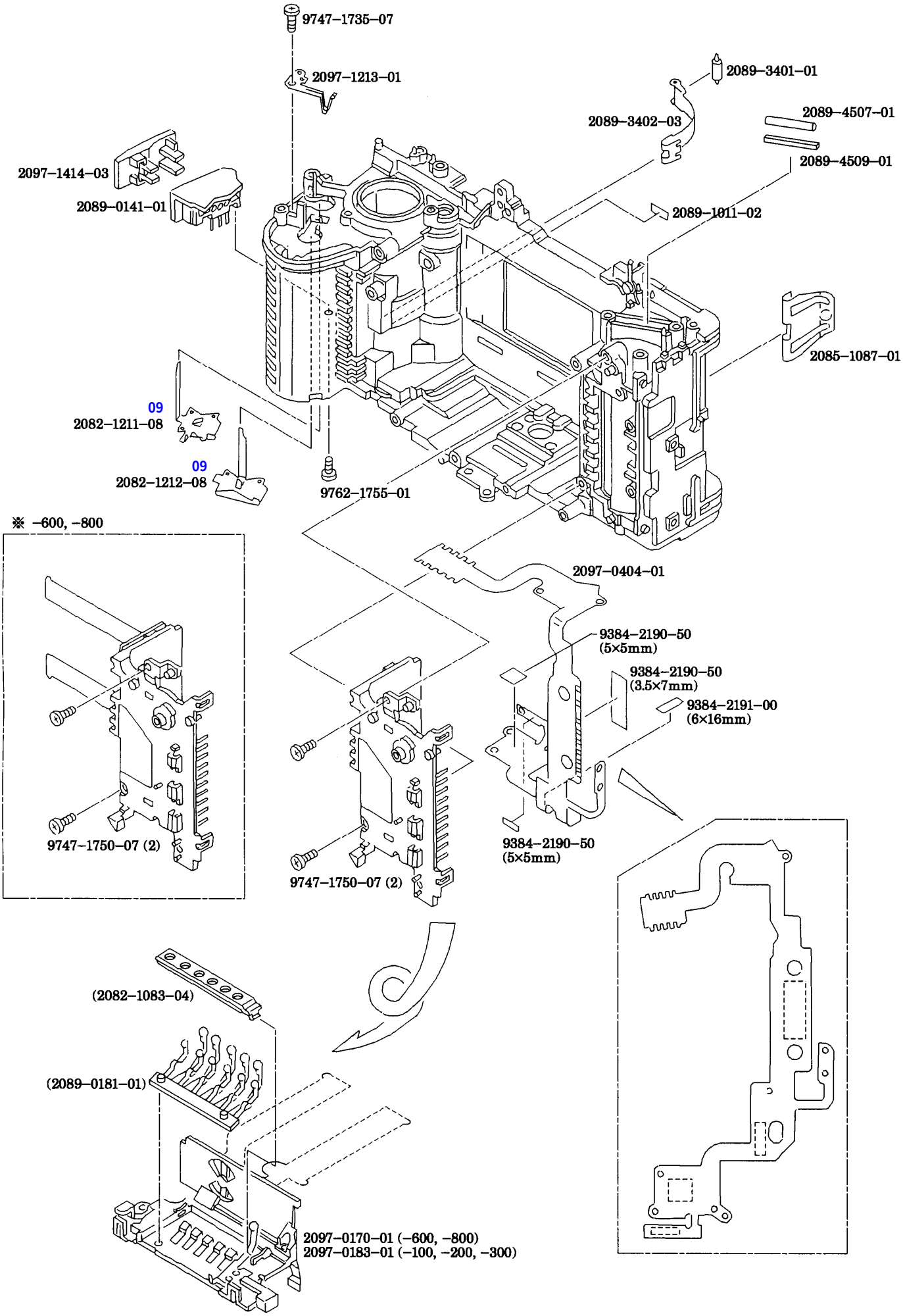
9747-1735-07
2097-1213-01
2089-3401-01
2089-3402-03
2089-4507-01
2089-4509-01
2097-1414-03
2089-0141-01
2089-1011-02
2085-1087-01
09
2082-1211-08
09
2082-1212-08
9762-1755-01
※ -600, -800
2097-0404-01
9384-2190-50
(5×5mm)
9384-2190-50
(3.5×7mm)
9384-2191-00
(6×16mm)
9747-1750-07 (2)
9747-1750-07 (2)
9384-2190-50
(5×5mm)
(2082-1083-04)
(2089-0181-01)
2097-0170-01 (-600, -800)
2097-0183-01 (-100, -200, -300)

PART NO.	PART NAME		QTY.
2089-0141-01	REMOTE-RELEASE UNIT	リモートホルダーセット	1
2097-0170-01	DX CONTACT BASE ASSY (-600, -800)	CAS接片台板セット	1
(2089-0181-01)	DX CONTACT	CAS接片	1
(2082-1083-04)	DX CONTACT HOLDER	CAS接片ホルダー	1
2097-0183-01	DX CONTACT BASE ASSY (-100, -200, -300)	CAS接片台板セット	1
(2089-0181-01)	DX CONTACT	CAS接片	1
(2082-1083-04)	DX CONTACT HOLDER	CAS接片ホルダー	1
2097-0404-01	FPC-D ASSY	Dフレキセット	1
2089-1011-02	LOADING INDEX	ローディング指標	1
2085-1087-01	SIDE SP	サイドSP	1
*2082-1211-08	BATTERY CONTACT-A (-)	電池接片A（－）	1
2082-1211-09	BATTERY CONTACT-A (-)	電池接片A（－）	1
*2082-1212-08	BATTERY CONTACT-B (+)	電池接片B（＋）	1
2082-1212-09	BATTERY CONTACT-B (+)	電池接片B（＋）	1
2097-1213-01	BATTERY DETECT SW	電池検知SW	1
2097-1414-03	REMOTE-RELEASE CAP	リモートレリーズ蓋	1
2089-3401-01	FILM ROLLER	フィルム押えローラー	1
2089-3402-03	ROLLER HOLDER	ローラーホルダー	1
2089-4507-01	RUBBER CONNECTOR-A	コネクターゴムA	1
2089-4509-01	CONNECTOR SPACER-A	コネクタースペーサーA	1
9384-2190-50	DOUBLE-FACED TAPE (PER ROLL)	両面テープ	3
9384-2191-00	DOUBLE-FACED TAPE (PER ROLL)	両面テープ	1
9747-1735-07	SCREW	ねじ	1
9747-1750-07	SCREW	ねじ	2
9762-1755-01	SCREW	ねじ	1

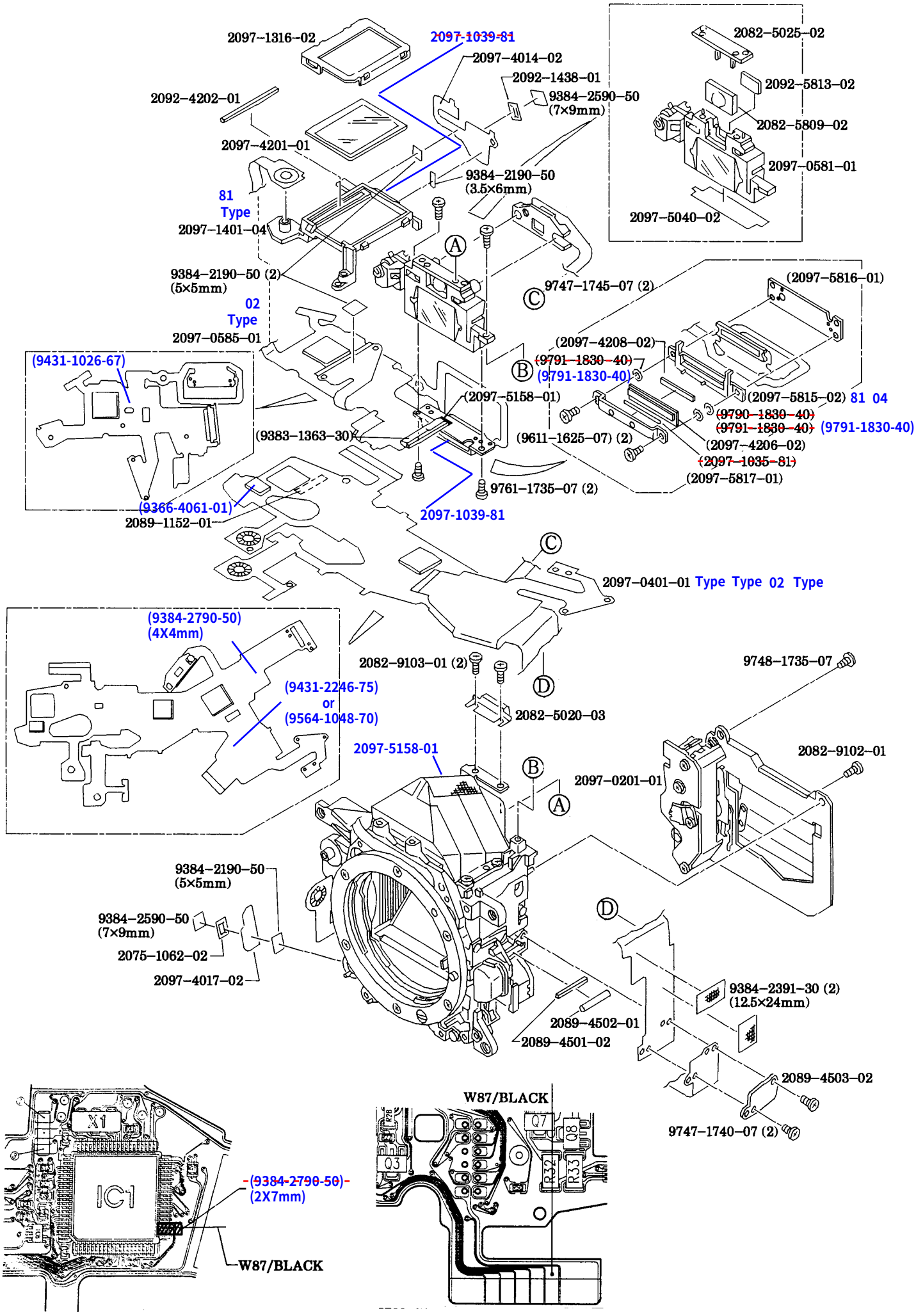
2097-1316-02
2097-1039-81
2097-4014-02
2092-1438-01
9384-2590-50
(7×9mm)
2092-4202-01
2097-4201-01
9384-2190-50
(3.5×6mm)
81
Type
2097-1401-04
9384-2190-50 (2)
(5×5mm)
02
Type
2097-0585-01
2082-5025-02
2092-5813-02
2082-5809-02
2097-0581-01
2097-5040-02
9747-1745-07 (2)
(2097-5816-01)
(2097-4208-02)
(9791-1830-40)
(9791-1830-40)
(2097-5815-02) 81 04
(9790-1830-40)
(9791-1830-40) (9791-1830-40)
(2097-4206-02)
(2097-1035-81)
(2097-5817-01)
(9431-1026-67)
(2097-5158-01)
(9383-1363-30)
(9611-1625-07) (2)
9761-1735-07 (2)
(9366-4061-01)
2089-1152-01
2097-1039-81
2097-0401-01 Type Type 02 Type
(9384-2790-50)
(4X4mm)
(9431-2246-75)
or
(9564-1048-70)
2082-9103-01 (2)
2082-5020-03
2097-5158-01
9748-1735-07
2082-9102-01
2097-0201-01
9384-2190-50
(5×5mm)
9384-2590-50
(7×9mm)
2075-1062-02
2097-4017-02
9384-2391-30 (2)
(12.5×24mm)
2089-4502-01
2089-4501-02
2089-4503-02
9747-1740-07 (2)
X1
IC1
(9384-2790-50)
(2X7mm)
W87/BLACK
W87/BLACK
Q7
Q8
Q3
R32
R33

PART NO.	PART NAME		QTY.
2097-0201-01	SHUTTER ASSY	シャッターユニット	1
*2097-0401-01	FPC-A ASSY	Aフレキセット	1
2097-0401-02	FPC-A ASSY	Aフレキセット	1
(9431-2246-75)	R54	Ｒ５４	1
~~(9384-2790-50)~~	FILM TAPE	フィルムテープ	1
(9384-2790-50)	FILM TAPE	フィルムテープ	1
(9564-1048-70)	C42	Ｃ４２	1
2097-0581-01	EYEPIECE LENS HOLDER ASSY	接眼レンズホルダーセット	1
*2097-0585-01	FPC-K ASSY	Kフレキセット	1
2097-0585-02	FPC-K ASSY	Kフレキセット	1
~~(2097-1035-81)~~	LCD 2 SHEET	LCD 2シート	1
(2097-4206-02)	LCD 2	LCD 2	1
(2097-4208-02)	LCD 2 CONNECTOR	LCD 2コネクター	1
(2097-5158-01)	MIRROR CUSHION	主ミラークッション	1
*(2097-5815-02)	LCD 2 HOLDER	LCD 2ホルダー	1
*(2097-5815-81)	LCD 2 HOLDER	LCD 2ホルダー	1
(2097-5815-04)	LCD 2 HOLDER	LCD 2ホルダー	1
(2097-5816-01)	LCD 2 PRESSURE-A	LCD 2押さえA	1
(2097-5817-01)	LCD 2 PRESSURE-B	LCD 2押さえB	1
(9366-4061-01)	IC-6	ＩＣ－６	1
(9383-1363-30)	CONNECTOR CN-101	コネクターCN－101	1
(9431-1026-67)	R8	R8	1
(9611-1625-07)	SCREW	ねじ	2
~~(9790-1830-40)~~	WASHER	ワッシャ	1
~~(9791-1830-40)~~	WASHER	ワッシャ	2
(9791-1830-40)	WASHER	ワッシャ	2
2075-1062-02	OVER RIDE CONTACT	オーバーライド接片	1
*2097-1039-81	LCD 2 STABILIZER	ＩＮＦケラレ防止シート	~~1~~ ~~2~~ 1
2089-1152-01	DUST-PROOF SHEET	防塵シート	1
2097-1316-02	LCD 1 PRESSURE	LCD 1押さえ	1
*2097-1401-04	LCD BASE	LCD台板	1
2097-1401-81	LCD BASE	LCD台板	1
2092-1438-01	CLICK CONTACT	クリック接片	1
2097-4014-02	FPC-N	Nフレキ	1
2097-4017-02	FPC-Q	Qフレキ	1
2097-4201-01	LCD 1	LCD 1	1
2092-4202-01	LCD 1 CONNECTOR	LCD 1コネクター	1
2089-4501-02	CONNECTOR SPACER-B	コネクタースペーサーB	1
2089-4502-01	CONNECTOR RUBBER-B	コネクターゴムB	1
2089-4503-02	CONNECTOR HOLDER-B	コネクター押え板B	1
2082-5020-03	SPC 1 PRESSURE	SPC 1押え	1
2082-5025-02	LIGHT SHIELD PLATE	測光遮光板	1
2097-5040-02	LIGHT SHIELD PLATE	遮光板	1
2097-5158-01	MIRROR CUSHION	主ミラークッション	1
2082-5809-02	METERING LENS	測光用レンズ	1
2092-5813-02	FILTER-S	フィルターS	1
2082-9102-01	SCREW	ねじ	1
2082-9103-01	SCREW	ねじ	2
9384-2190-50	DOUBLE-FACED TAPE (PER ROLL)	両面テープ	4
9384-2391-30	ACETATE TAPE (PER ROLL)	アセテートクロステープ	2
9384-2590-50	MENDING TAPE (1R/50M)	メンデイングテープ	2
9747-1740-07	SCREW	ねじ	2
9747-1745-07	SCREW	ねじ	2
9748-1735-07	SCREW	ねじ	1
9761-1735-07	SCREW	ねじ	2

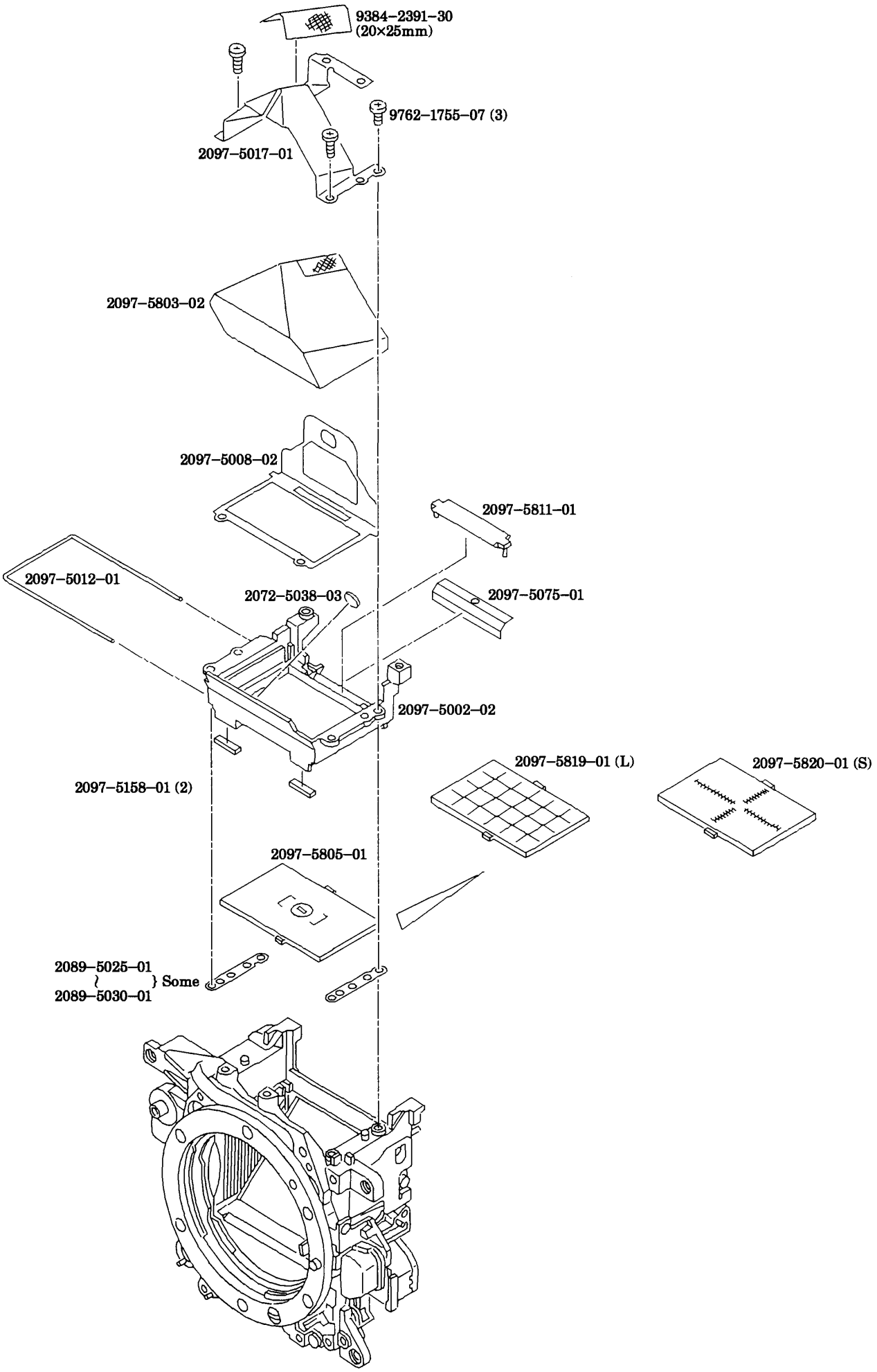
9384-2391-30
(20×25mm)
9762-1755-07 (3)
2097-5017-01
2097-5803-02
2097-5008-02
2097-5811-01
2097-5012-01
2072-5038-03
2097-5075-01
2097-5002-02
2097-5819-01 (L)
2097-5820-01 (S)
2097-5158-01 (2)
2097-5805-01
2089-5025-01
2089-5030-01
Some

PART NO.	PART NAME		QTY.
2097-5002-02	PENTA. HOLDER	ペンタホルダー	1
2097-5008-02	VIEWFINDER FRAME	視野枠	1
2097-5012-01	FOCUSING SCREEN SP	焦点板押さえSP	1
2097-5017-01	PENTA. PRESSURE	ペンタ押さえ	1
2089-5025-01	VB ADJUSTMENT PLATE-A (T=0.15)	VB調整板A	Some
2089-5026-01	VB ADJUSTMENT PLATE-B (T=0.20)	VB調整板B	
2089-5027-01	VB ADJUSTMENT PLATE-C (T=0.25)	VB調整板C	
2089-5028-01	VB ADJUSTMENT PLATE-D (T=0.30)	VB調整板D	
2089-5029-01	VB ADJUSTMENT PLATE-E (T=0.35)	VB調整板E	
2089-5030-01	VB ADJUSTMENT PLATE-F (T=0.40)	VB調整板F	
2072-5038-03	PENTA. CUSHION	ペンタ前面押えクッション	1
2097-5075-01	DUST-PROOF PLATE	IF防塵板	1
2097-5158-01	MIRROR CUSHION	主ミラークッション	2
2097-5803-02	PENTA-PRISM	ペンタプリズム	1
2097-5805-01	FOCUSING SCREEN	焦点板	1
2097-5811-01	VIEWFINDER PRISM	IFプリズム	1
2097-5819-01	FOCUSING SCREEN (L)	焦点板（L）	1
2097-5820-01	FOCUSING SCREEN (S)	焦点板（S）	1
9384-2391-30	ACETATE TAPE (PER ROLL)	アセテートクロステープ	1
9762-1755-07	SCREW	ねじ	3

7 (2097)A

2097–0500–01

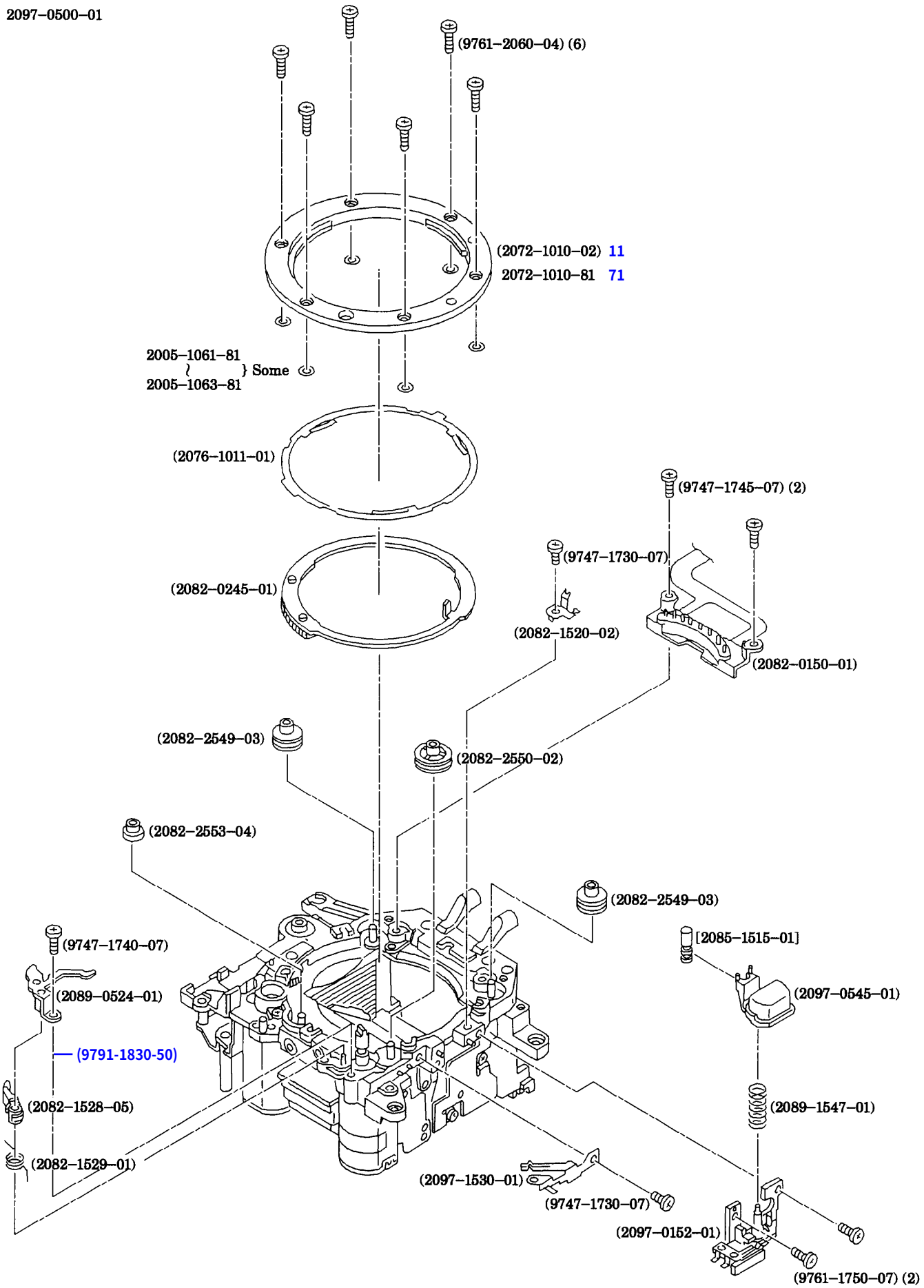

PART NO.	PART NAME		QTY.
2097-0500-01	MIRROR BOX ASSY	ミラーボックスセット	1
(2082-0150-01)	BL CONTACT HOLDER SET	BL接点ホルダーセット	1
(2097-0152-01)	LENS-RELEASE BASE ASSY	レンズロック台板セット	1
(2082-0245-01)	APERTURE RING SET	絞りリングセット	1
(2089-0524-01)	COUPLER LEVER SET	カプラーレバーセット	1
(2097-0545-01)	LENS-RELEASE ASSY	レンズロック釦セット	1
[2085-1515-01]	LENS LOCK PIN	レンズロックピン	1
*(2072-1010-02)	BAYONET LENS MOUNT	マウント	1
(2072-1010-11)	BAYONET LENS MOUNT	マウント	1
(2076-1011-01)	BAYONET SP	リングSP	1
(2082-1520-02)	GROUND CONTACT	座板アース接片	1
(2082-1528-05)	COUPLER STOP LEVER	カプラー係止レバー	1
(2082-1529-01)	COUPLER STOP LEVER SP-A	カプラー係止レバーSP－A	1
(2097-1530-01)	SAF/M CONTACT	SAF／M接片	1
(2089-1547-01)	LENS-RELEASE SP	レンズロックSP	1
(2082-2549-03)	RING ROLLER-A	リングローラーA	2
(2082-2550-02)	RING ROLLER-B	リングローラーB	1
(2082-2553-04)	RING ROLLER-C	リングローラーC	1
(9747-1730-07)	SCREW	ねじ	2
(9747-1740-07)	SCREW	ねじ	1
(9747-1745-07)	SCREW	ねじ	2
(9761-1750-07)	SCREW	ねじ	2
(9761-2060-04)	SCREW	ねじ	6
(9791-1830-50)	WASHER	ワッシャ	1
2072-1010-71	BAYONET LENS MOUNT	マウント	1
*2072-1010-81	BAYONET LENS MOUNT	マウント	1
2005-1061-81	ADJUSTMENT WASHER-A (T=0.02)	調整ワッシャA	Some
2005-1062-81	ADJUSTMENT WASHER-B (T=0.05)	調整ワッシャB	
2005-1063-81	ADJUSTMENT WASHER-C (T=0.1)	調整ワッシャC	

8 (2097)A

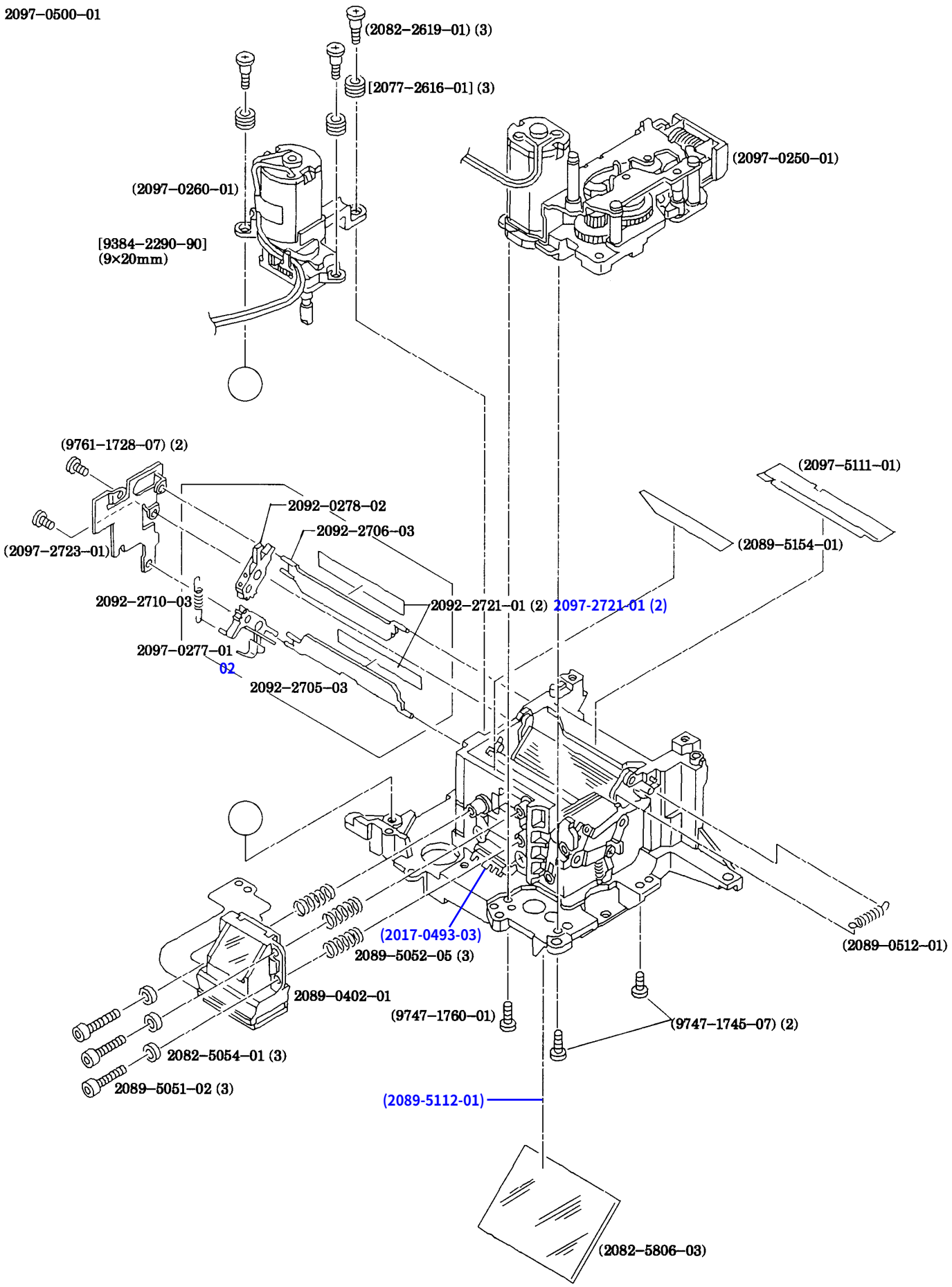
2097–0500–01
(2082–2619–01) (3)
[2077–2616–01] (3)
(2097–0250–01)
(2097–0260–01)
[9384–2290–90]
(9×20mm)
(9761–1728–07) (2)
(2097–5111–01)
2092–0278–02
2092–2706–03
(2097–2723–01)
(2089–5154–01)
2092–2710–03
2092–2721–01 (2) 2097-2721-01 (2)
2097–0277–01
02
2092–2705–03
(2017-0493-03)
2089–5052–05 (3)
(2089–0512–01)
2089–0402–01
(9747–1760–01)
(9747–1745–07) (2)
2082–5054–01 (3)
2089–5051–02 (3)
(2089-5112-01)
(2082–5806–03)

PART NO.	PART NAME		QTY.
2097-0500-01			
(2097-0250-01)	APERTURE BASE ASSY	絞り台板セット	1
(2097-0260-01)	AF MOTOR BASE ASSY	AFモーター台板セット	1
[2077-2616-01]	COLLAR	AFサイレントカラー	3
[9384-2290-90]	POLYESTER TAPE (PER ROLL/60M)	ポリエステルテープ	1
(2017-0493-03)	SPC-2	ＳＰＣ－２	1
(2089-0512-01)	MIRROR DOWN SP UNIT	主ミラーダウンSPセット	1
(2082-2619-01)	SCREW	ねじ	3
(2097-2723-01)	PANORAMA BASE	パノラマ切り換え台板	1
(2097-5111-01)	LIGHT SHIELD SHEET-A	遮光シートA	1
(2089-5112-01)	MASK SHEET	マスク板	1
(2089-5154-01)	LIGHT SHIELD SHEET-B	遮光シートB	1
(2082-5806-03)	MAIN MIRROR	主ミラー	1
(9747-1745-07)	SCREW	ねじ	1
(9747-1760-01)	SCREW	ねじ	1
(9761-1728-07)	SCREW	ねじ	2
*2097-0277-01	PANORAMA OPERATION LEVER ASSY-A (-600, -800)	パノラマ可動レバーセットA	1
2097-0277-02	PANORAMA OPERATION LEVER ASSY-A (-600, -800)	パノラマ可動レバーセットA	1
2092-0278-02	PANORAMA OPERATION LEVER UNIT-B (-600, -800)	パノラマ可動レバーセットB	1
2089-0402-01	FPC-B SET	Bフレキセット	1
2092-2705-03	PANORAMA FRAME PLATE-C	パノラマ遮光板C	1
2092-2706-03	PANORAMA FRAME PLATE-D	パノラマ遮光板D	1
2092-2710-03	PANORAMA OPERATION SP-B	パノラマ駆動SP－B	1
*2092-2721-01	PROTECTION SHEET	保護シート	2
2097-2721-01	PROTECTION SHEET	保護シート	2
2089-5051-02	SCREW	ねじ	3
2089-5052-05	AF ADJUSTMENT SP	AF調整SP	3
2082-5054-01	WASHER	ワッシャ	3

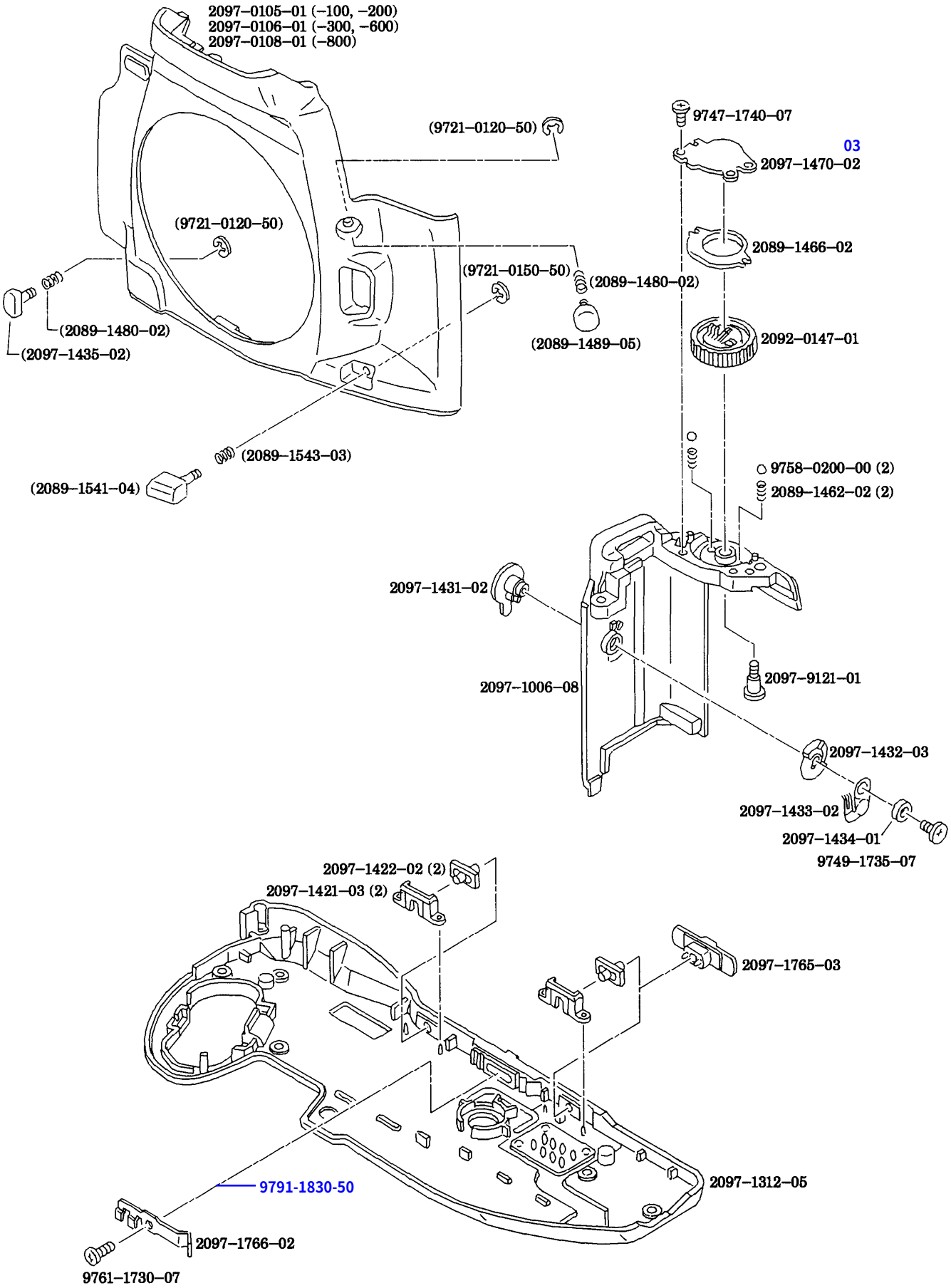
2097–0105–01 (–100, –200)
2097–0106–01 (–300, –600)
2097–0108–01 (–800)
(9721–0120–50)
(9721–0120–50)
9747–1740–07
03
2097–1470–02
2089–1466–02
(9721–0150–50)
(2089–1480–02)
(2089–1480–02)
(2097–1435–02)
(2089–1489–05)
2092–0147–01
(2089–1543–03)
(2089–1541–04)
9758–0200–00 (2)
2089–1462–02 (2)
2097–1431–02
2097–1006–08
2097–9121–01
2097–1432–03
2097–1433–02
2097–1434–01
9749–1735–07
2097–1422–02 (2)
2097–1421–03 (2)
2097–1765–03
9791-1830-50
2097–1312–05
2097–1766–02
9761–1730–07

PART NO.	PART NAME		QTY.
2097-0105-01	FRONT COVER ASSY (-100, -200)	前カバーセット	1
2097-0106-01	FRONT COVER ASSY (-300, -600)	前カバーセット	1
2097-0108-01	FRONT COVER ASSY (-800)	前カバーセット	1
(2097-1435-02)	PREVIEW BUTTON	プレビユー釦	1
(2089-1480-02)	BUTTON SP	釦SP	2
(2089-1489-05)	FLASH-CONTROL BUTTON	フラッシュ釦	1
(2089-1541-04)	FOCUS-MODE BUTTON	フォーカスモード釦	1
(2089-1543-03)	FOCUS-MODE BUTTON SP	フォーカスモード釦SP	1
(9721-0120-50)	E-RING	Eリング	2
(9721-0150-50)	E-RING	Eリング	1
2092-0147-01	DIAL ASSY	ダイヤルセット	1
2097-1006-08	STRAP EYELET (R)	巻き上げ側吊環	1
2097-1431-02	AF-MODE SELECTOR	AFモード切り換えレバー	1
2097-1432-03	AF CLICK PLATE	AF切り換えクリック板	1
2097-1433-02	AF-MODE CONTACT	AFモード切り換え接片	1
2097-1434-01	SPACER	スペーサー	1
2089-1462-02	DIAL SP	ダイヤルSP	2
2089-1466-02	DIAL DUST-PROOF PLATE	ダイヤル防塵板	1
*2097-1470-02	REAR DIAL PCB	後ダイヤル基板	1
2097-1470-03	REAR DIAL PCB	後ダイヤル基板	1
2097-9121-01	SCREW	ねじ	1
9747-1740-07	SCREW	ねじ	1
9749-1735-07	SCREW	ねじ	1
9758-0200-00	STEEL BALL	スチールボール	2
2097-1312-05	BOTTOM COVER	下カバー	1
2097-1421-03	REWIND BUTTON HOLDER	巻き戻し釦受け	2
2097-1422-02	REWIND BUTTON	巻き戻し釦	2
2097-1765-03	FLASH-MODE SELECTOR	フラッシュモード切り換えレバー	1
2097-1766-02	FLASH-MODE CLICK PLATE	フラッシュモード切り換えクリック板	1
9761-1730-07	SCREW	ねじ	1
9791-1830-50	WASHER	ワッシャ	1

NON DATE MODEL (–100, –300)

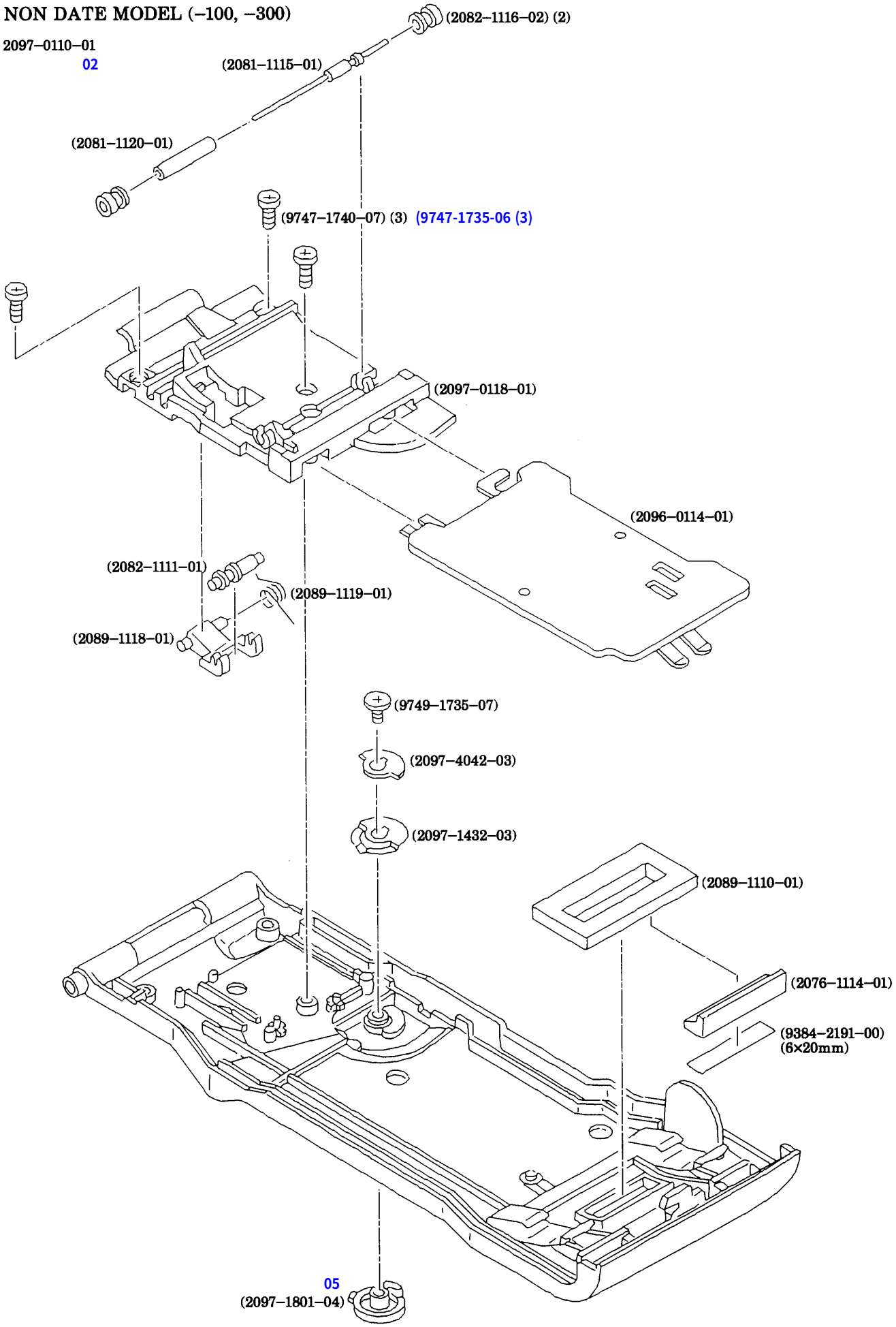

PART NO.	PART NAME		QTY.
*2097-0110-01	BACK COVER ASSY (-100, -300)	裏蓋セット	1
2097-0110-02	BACK COVER ASSY (-100, -300)	裏蓋セット	1
(2096-0114-01)	PRESSURE PLATE SET	圧着板セット	1
(2097-0118-01)	ROLLER BASE ASSY (-100, -300)	ローラー保持台セット	1
(2089-1110-01)	LIGHT SHIELD SPONGE	パト表示遮光片	1
(2082-1111-01)	BACK COVER ROLLER-B	裏蓋可動ローラー	1
(2076-1114-01)	LIGHT SHIELD FRAME	遮光片枠	1
(2081-1115-01)	BACK COVER ROLLER-A AXIS	裏蓋固定ローラー軸	1
(2082-1116-02)	BACK COVER ROLLER-A	裏蓋固定ローラー	2
(2089-1118-01)	ROLLER PLATE	裏蓋可動板	1
(2089-1119-01)	ROLLER PLATE SP	裏蓋可動板SP	1
(2081-1120-01)	BACK COVER ROLLER COLLAR	裏蓋固定ローラーカラー	1
(2097-1432-03)	AF CLICK PLATE	AF切り換えクリック板	1
*(2097-1801-04)	AF-AREA SELECTOR	AFエリア切り換えレバー	1
(2097-1801-05)	AF-AREA SELECTOR	AFエリア切り換えレバー	1
(2097-4042-03)	AF-AREA PCB	AF切り換え基板	1
(9384-2191-00)	DOUBLE-FACED TAPE (PER ROLL)	両面テープ	1
~~(9747-1740-07)~~	SCREW	ねじ	3
(9749-1735-06)	SCREW	ねじ	3
(9749-1735-07)	SCREW	ねじ	1

11 (2097)A

DATE MODEL (−600, −800)

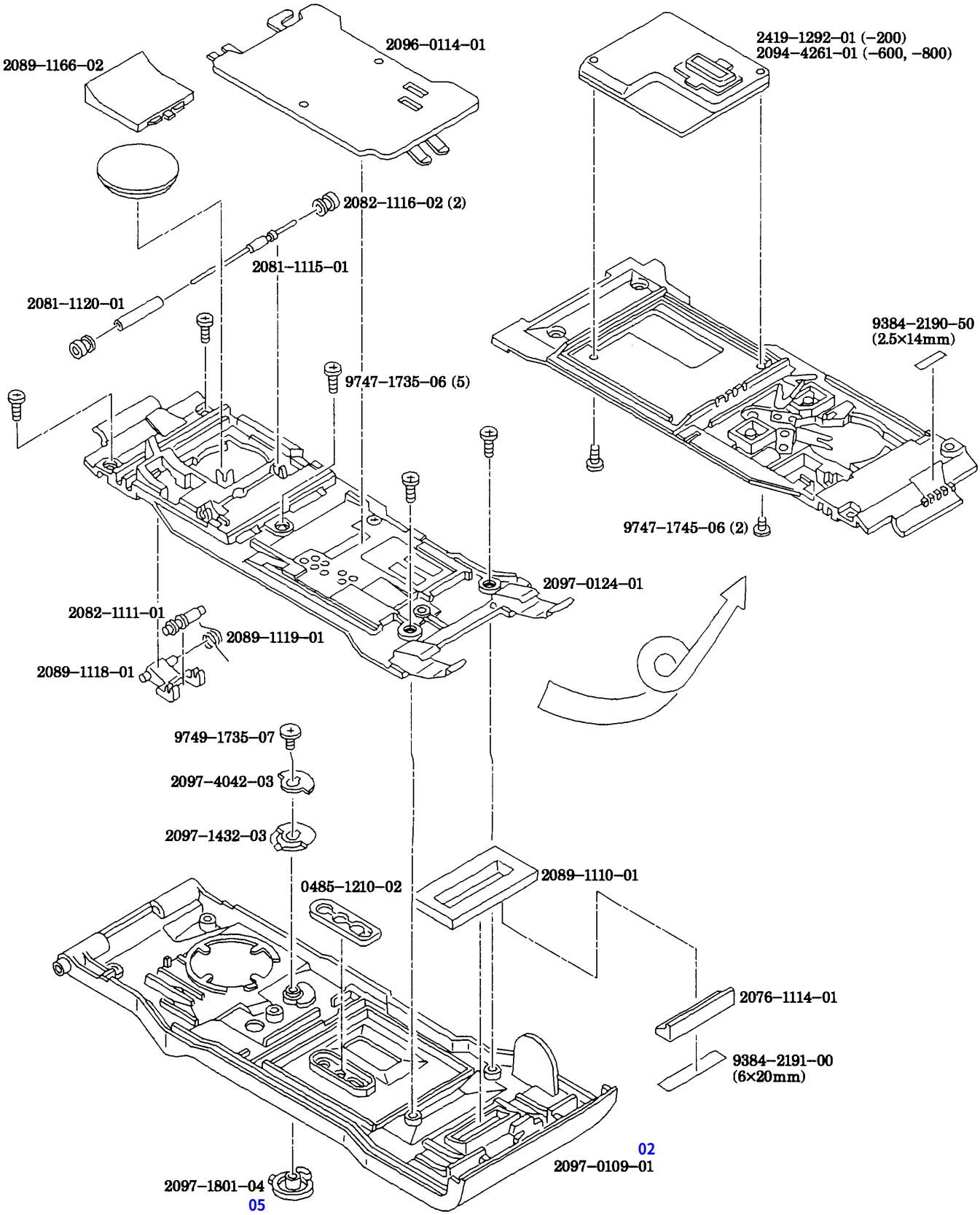

PART NO.	PART NAME		QTY.
*2097-0109-01	BACK COVER ASSY (-200, -600, -800)	裏蓋セット	1
2097-0109-02	BACK COVER ASSY (-200, -600, -800)	裏蓋セット	1
2096-0114-01	PRESSURE PLATE SET	圧着板セット	1
2097-0124-01	DATE MODULE BASE ASSY (-200, -600, -800)	デートモジュール台板セット	1
2089-1110-01	LIGHT SHIELD SPONGE	パト表示遮光片	1
2082-1111-01	BACK COVER ROLLER-B	裏蓋可動ローラー	1
2076-1114-01	LIGHT SHIELD FRAME	遮光片枠	1
2081-1115-01	BACK COVER ROLLER-A AXIS	裏蓋固定ローラー軸	1
2082-1116-02	BACK COVER ROLLER-A	裏蓋固定ローラー	2
2089-1118-01	ROLLER PLATE	裏蓋可動板	1
2089-1119-01	ROLLER PLATE SP	裏蓋可動板SP	1
2081-1120-01	BACK COVER ROLLER COLLAR	裏蓋固定ローラーカラー	1
2089-1166-02	BATTERY COVER (-200, -600, -800)	電池蓋	1
0485-1210-02	KEY	切替釦	1
2419-1292-01	DATE MODULE (-200)	デートモジュール	1
2097-1432-03	AF CLICK PLATE	AF切り換えクリック板	1
*2097-1801-04	AF-AREA SELECTOR	AFエリア切り換えレバー	1
2097-1801-05	AF-AREA SELECTOR	AFエリア切り換えレバー	1
2097-4042-03	AF-AREA PCB	AF切り換え基板	1
2094-4261-01	DATE MODULE (-600, -800)	デートモジュール	1
9384-2190-50	DOUBLE-FACED TAPE (PER ROLL)	両面テープ	1
9384-2191-00	DOUBLE-FACED TAPE (PER ROLL)	両面テープ	1
9747-1735-06	SCREW	ねじ	5
9747-1745-06	SCREW	ねじ	2
9749-1735-07	SCREW	ねじ	1

2097–0131–01 (–100, –200)
2097–0133–01 (–300)
2097–0135–01 (–600)
2097–0138–01 (–800)

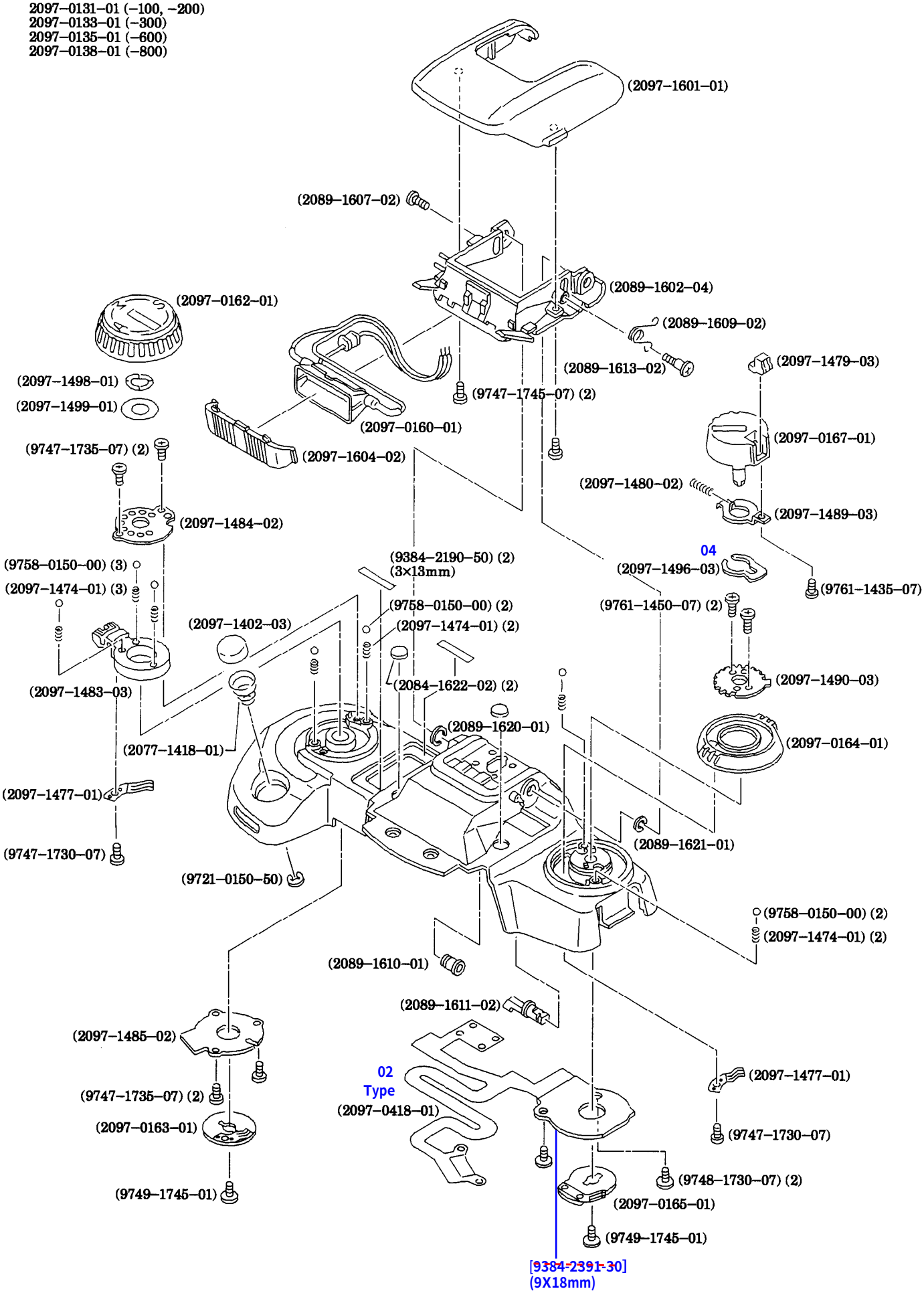

PART NO.	PART NAME		QTY.
2097-0131-01	TOP COVER ASSY (-100, -200)	上カバーセット	1
2097-0133-01	TOP COVER ASSY (-300)	上カバーセット	1
2097-0135-01	TOP COVER ASSY (-600)	上カバーセット	1
2097-0138-01	TOP COVER ASSY (-800)	上カバーセット	1
(2097-0160-01)	XE HOLDER ASSY	XEホルダーセット	1
(2097-0162-01)	EXPOSURE-MODE DIAL ASSY	露出モードダイヤルセット	1
(2097-0163-01)	EXPOSURE-MODE CONTACT ASSY	露出モード接片セット	1
(2097-0164-01)	FLASH-COMPENSATION DIAL ASSY	調光補正ダイヤルセット	1
(2097-0165-01)	FLASH-COMPENSATION CONTACT ASSY	調光補正接片セット	1
(2097-0167-01)	EXPOSURE-COMPENSATION DIAL ASSY	露出補正ダイヤルセット	1
*(2097-0418-01)	FPC-H ASSY	Hフレキセット	1
(2097-0418-02)	FPC-H ASSY	Hフレキセット	1
~~[9384-2391-30]~~	ACETATE TAPE (PER ROLL)	アセテートクロステープ	1
(2097-1402-03)	SHUTTER-RELEASE BUTTON	レリーズ釦	1
(2077-1418-01)	RELEASE BUTTON SPRING	レリーズ釦SP	1
(2097-1474-01)	CLICK SP	クリックSP	7
(2097-1477-01)	MODE CONTACT	モード接片	2
(2097-1479-03)	EXPOSURE-COMPENSATION RELEASE	露出補正ロック釦	1
(2097-1480-02)	E. C. RELEASE SP	露出補正ロックSP	1
(2097-1483-03)	DRIVE-MODE SELECTOR	ドライブモードダイヤル	1
(2097-1484-02)	DRIVE-MODE CLICK PLATE	ドライブモードクリック板	2
(2097-1485-02)	EXPOSURE-MODE PCB	露出モード基板	1
(2097-1489-03)	E. C. RELEASE PLATE	露出補正ロック板	1
(2097-1490-03)	E. C. DIAL CLICK PLATE	露出補正ダイヤルクリック板	1
*(2097-1496-03)	SPACER	スペーサー	1
(2097-1496-04)	SPACER	スペーサー	1
(2097-1498-01)	FRICTION WASHER	フリクションワッシャ	1
(2097-1499-01)	WASHER	ワッシャ	1
(2097-1601-01)	FLASH COVER	フラッシュカバー	1
(2089-1602-04)	FLASH BASE PLATE	フラッシュ台板	1
(2097-1604-02)	FLASH PANEL	フラッシュパネル	1
(2089-1607-02)	SCREW	ねじ	1
(2089-1609-02)	SNAP ACTION SP	スナップアクションSP	1
(2089-1610-01)	FLASH SHAFT (L)	回転軸（L）	1
(2089-1611-02)	FLASH SHAFT (R)	回転軸（R）	1
(2089-1613-02)	SCREW	ねじ	1
(2089-1620-01)	C-RING	Cリング	1
(2089-1621-01)	C-RING	Cリング	1
(2084-1622-02)	COVER PLATE-A	F飾り板A	2
(9384-2190-50)	DOUBLE-FACED TAPE (PER ROLL)	両面テープ	2
(9721-0150-50)	E-RING	Eリング	1
(9747-1730-07)	SCREW	ねじ	2
(9747-1735-07)	SCREW	ねじ	4
(9747-1745-07)	SCREW	ねじ	2
(9748-1730-07)	SCREW	ねじ	2
(9749-1745-01)	SCREW	ねじ	2
(9758-0150-00)	STEEL BALL	スチールボール	7
(9761-1435-07)	SCREW	ねじ	1
(9761-1450-07)	SCREW	ねじ	2

13 (2097)A

2097–0131–01 (–100, –200)
2097–0133–01 (–300)
2097–0135–01 (–600)
2097–0138–01 (–800)

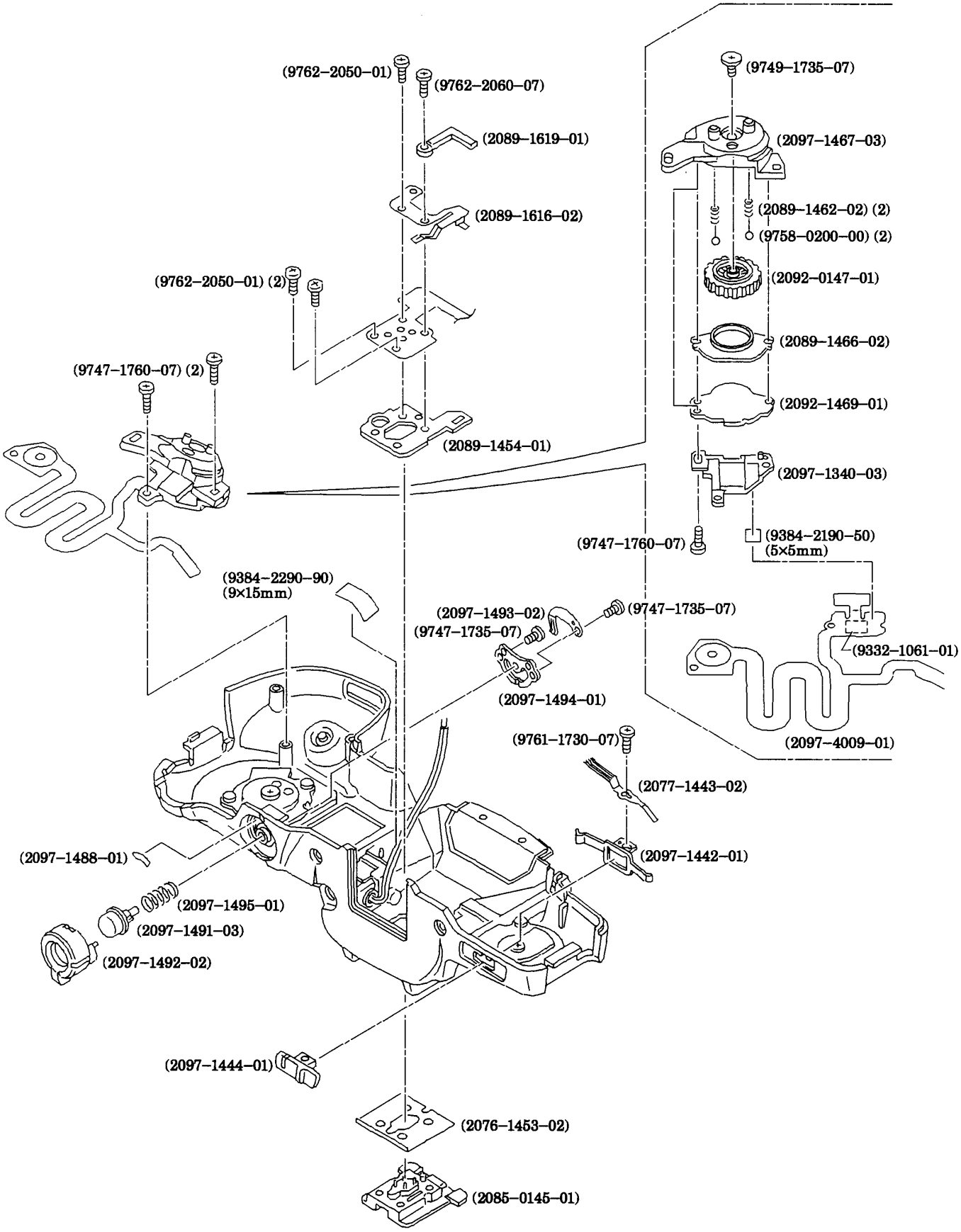

PART NO.	PART NAME		QTY.
2097-0131-01			
2097-0133-01			
2097-0135-01			
2097-0138-01			
(2085-0145-01)	ACC. SHOE SET	アクセサリーシューセット	1
(2092-0147-01)	DIAL ASSY	ダイヤルセット	1
(2097-1340-03)	RELEASE BASE PLATE	レリーズ台板	1
(2097-1442-01)	MAIN SWITCH CLICK PLATE	メインSWクリック板	1
(2077-1443-02)	MAIN SWITCH CONTACT	メインSW接片	1
(2097-1444-01)	MAIN SWITCH	メインSWレバー	1
(2076-1453-02)	SHOE BASE	シユー敷板	1
(2089-1454-01)	SHOE SETTING PLATE	シユー取付け板	1
(2089-1462-02)	DIAL SP	ダイヤルSP	2
(2089-1466-02)	DIAL DUST-PROOF PLATE	ダイヤル防塵板	1
(2097-1467-03)	FRONT DIAL HOLDER	前ダイヤルホルダー	1
(2092-1469-01)	DIAL PCB	ダイヤル基板	1
(2097-1488-01)	SPACER SHEET	補正シート	1
(2097-1491-03)	AE-LOCK BUTTON	AEL釦	1
(2097-1492-02)	METERING-MODE SELECTOR	測光モード切り換えレバー	1
(2097-1493-02)	METERING-MODE CONTACT	測光モード接片	1
(2097-1494-01)	METERING-MODE CLICK PLATE	測光モードクリック板	1
(2097-1495-01)	AE-LOCK BUTTON SP	AEL釦SP	1
(2089-1616-02)	SFL CONTACT	SFL接片	1
(2089-1619-01)	SFL CONTACT COVER	SFL接片カバー	1
(2097-4009-01)	FPC-I	Iフレキ	1
(9332-1061-01)	SW 1	SW 1	1
(9384-2190-50)	DOUBLE-FACED TAPE (PER ROLL)	両面テープ	1
(9384-2290-90)	POLYESTER TAPE (PER ROLL/60M)	ポリエステルテープ	1
(9747-1735-07)	SCREW	ねじ	2
(9747-1760-07)	SCREW	ねじ	3
(9749-1735-07)	SCREW	ねじ	1
(9758-0200-00)	STEEL BALL	スチールボール	2
(9761-1730-07)	SCREW	ねじ	1
(9762-2050-01)	SCREW	ねじ	3
(9762-2060-07)	SCREW	ねじ	1

■Wiring Diagram 1 (2097)

■LEAD WIRES LIST

2097-4401-01	(SHIELD)
2097-4441-01	(W151)
2097-4442-01	(W152)
2097-4443-02	(W153)
2097-4444-02	(W154)
9391-0807-□□	(OTHER)

■-100, -300
◆-200, -600, -800
★-600, -800

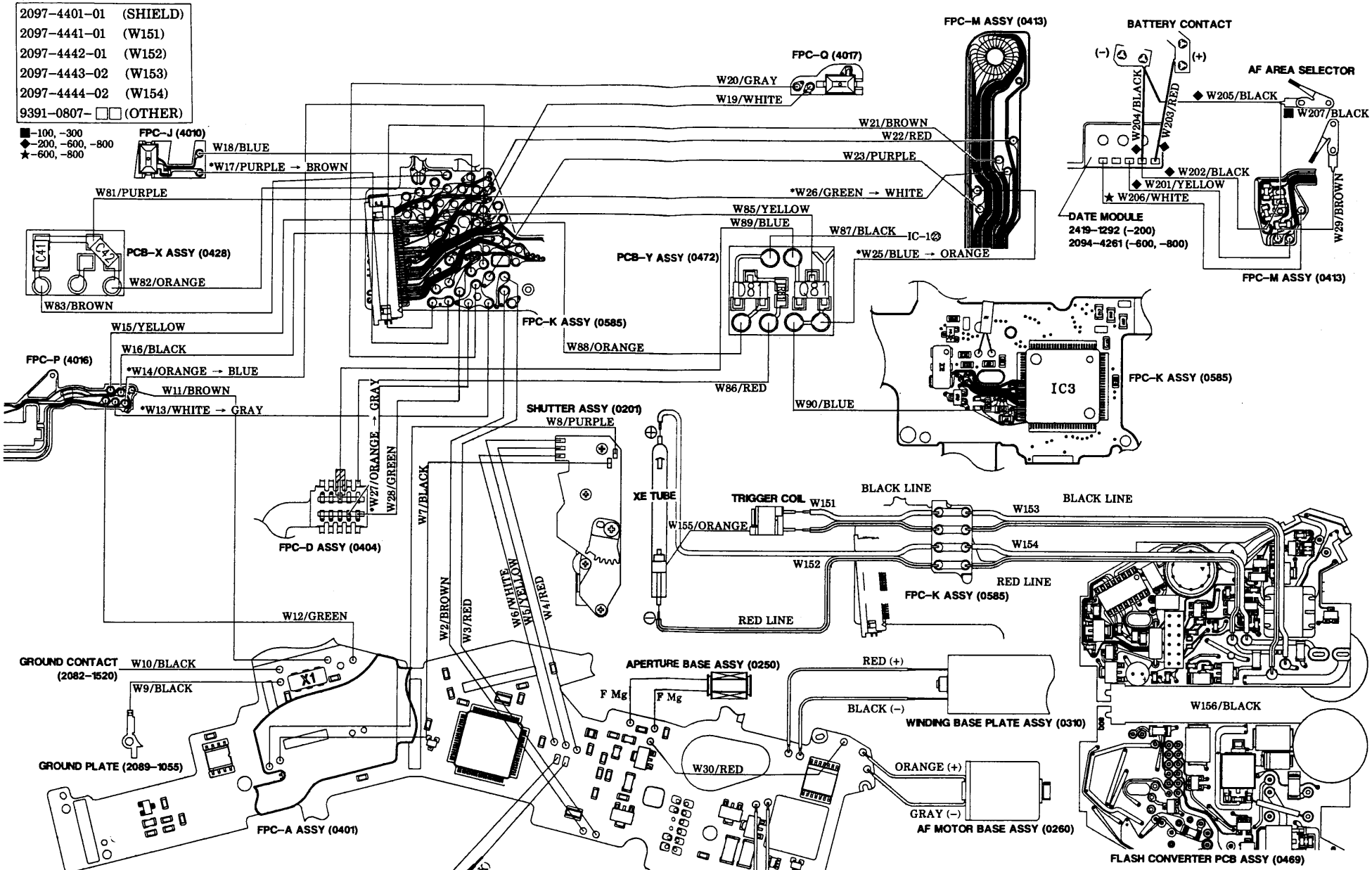

□□	COLOR/色	□□	COLOR/色
00	BLACK/黒	07	PURPLE/紫
01	BROWN/茶	08	GRAY/灰
02	RED/赤	09	WHITE/白
03	ORANGE/橙	10	PINK/ピンク
04	YELLOW/黄	11	LIGHT BLUE/水色
05	GREEN/緑	12	YELLOWISH GREEN/黄緑
06	BLUE/青		

■WIRING DIAGRAM 2 (2097)

■-100, -300
☆-200, -600, -800
★-600, -800

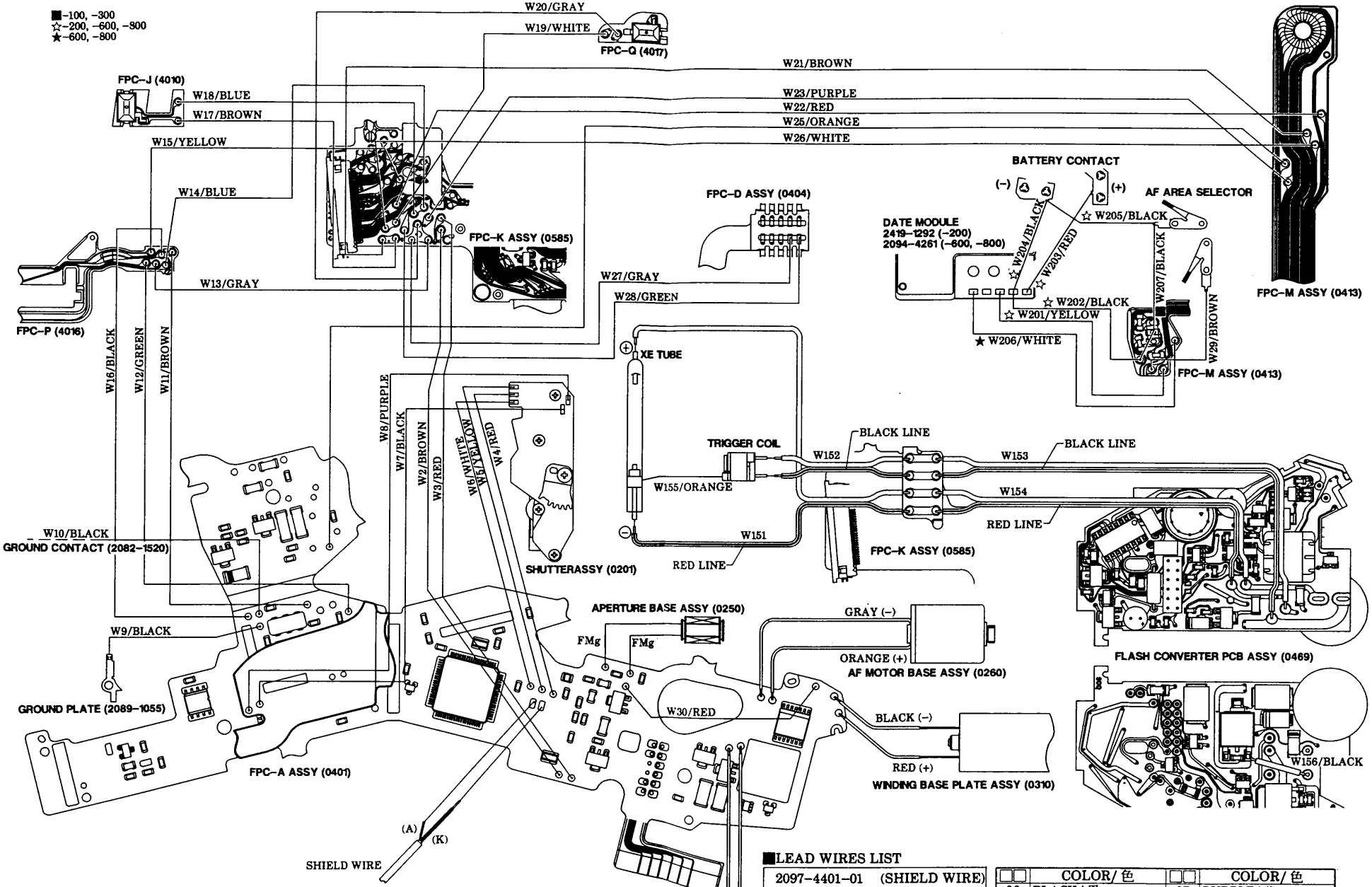

■LEAD WIRES LIST

2097-4401-01	(SHIELD WIRE)
2097-4441-01	(W151)
2097-4442-01	(W152)
2097-4443-02	(W153)
2097-4444-02	(W154)
9391-0807-□□	(OTHER)

□□	COLOR/色	□□	COLOR/色
00	BLACK/黒	07	PURPLE/紫
01	BROWN/茶	08	GRAY/灰
02	RED/赤	09	WHITE/白
03	ORANGE/橙	10	PINK/ピンク
04	YELLOW/黄	11	LIGHT BLUE/水色
05	GREEN/緑	12	YELLOWISH GREEN/黄緑
06	BLUE/青		

管理 No. REF No.	10–2097–001

PARTS MODIFICATION LIST

■No. 001 Parts List P. 12 仮–484

変更理由 REASON	パターン断線の改善 To prevent pattern disconnection	共通機種 COMMON MODEL	2097 Series

Previous	————————	→ —	— ←	9384–2391–30	New

2097–0418–01

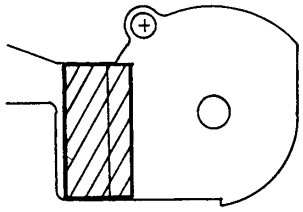

9384–2391–30
(9×18mm)
アセテートクロステープ
ACETATE TAPE (PER ROLL)
追加 /Added

管理 No. REF No.	10–2097–002

■No. 002 Parts List P. 12 仮–485

変更理由 REASON	生産都合 For efficient production	共通機種 COMMON MODEL	2097 Series

Previous	2097–0418–01	→ —	— ←	2097–0418–01	New

2097–0418–01

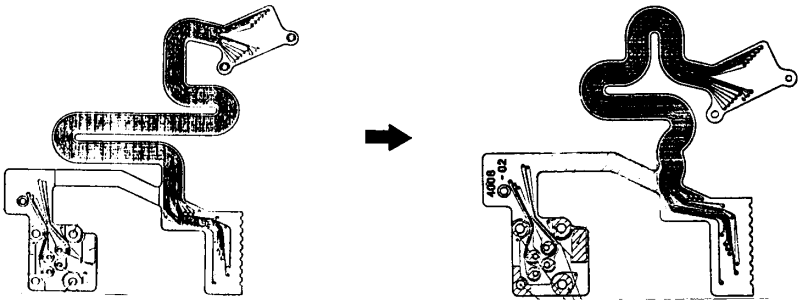

• 2097–0418–01 は形状の異なる 2 タイプがあります。
• No change in parts No. Discern the type by the shape.

■本案内に従い、パーツリストへ転記等、メンテナンスを行って下さい。
According to this list, correct "Part List" in Service Manual for effective parts management.

MINOLTA CO.,LTD.

管理 No. REF No.	10–2097–003

PARTS MODIFICATION LIST

■No. 003 Parts List P. 10, 11 2097–217

変更理由 REASON	手配都合 For efficient parts supply			共通機種 COMMON MODEL	2097 Series	
Previous	2097–1801–04	→ ––	–– ←	2097–1801–05		New

P. 10

P. 11

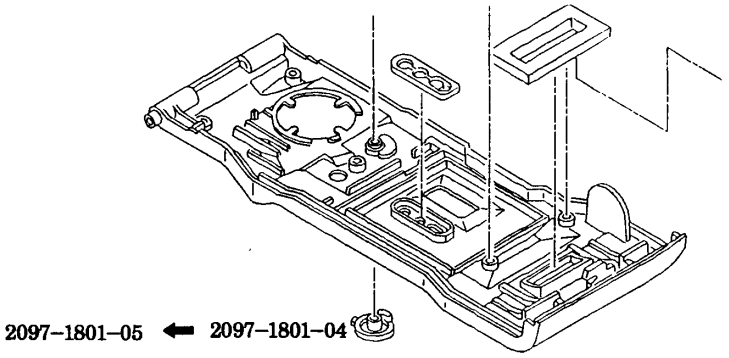

• 管理 No. 変更
• Parts No. change (No modification to the part)

管理 No. REF No.	10–2097–004

■No. 004 Parts List P. 9 2097–236

変更理由 REASON	ショート防止 To prevent short circuit			共通機種 COMMON MODEL	2097 Series	
Previous	2097–1470–02	→○	×←	2097–1470–03		New

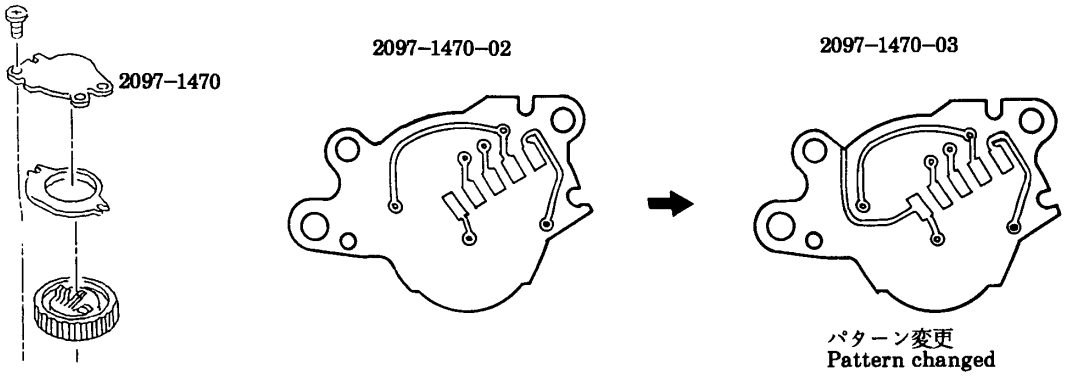

■本案内に従い、パーツリストへ転記等、メンテナンスを行って下さい。
According to this list, correct "Part List" in Service Manual for effective parts management.

MINOLTA CO.,LTD.

管理 No. REF No.	10–2097–005

PARTS MODIFICATION LIST

■No. 005 Parts List P. 5 2097–248

変更理由 REASON	生産都合 / For efficient production			共通機種 COMMON MODEL	2097 Series	
Previous	2097–0401–01	→ —	— ←	2097–0401–01		New

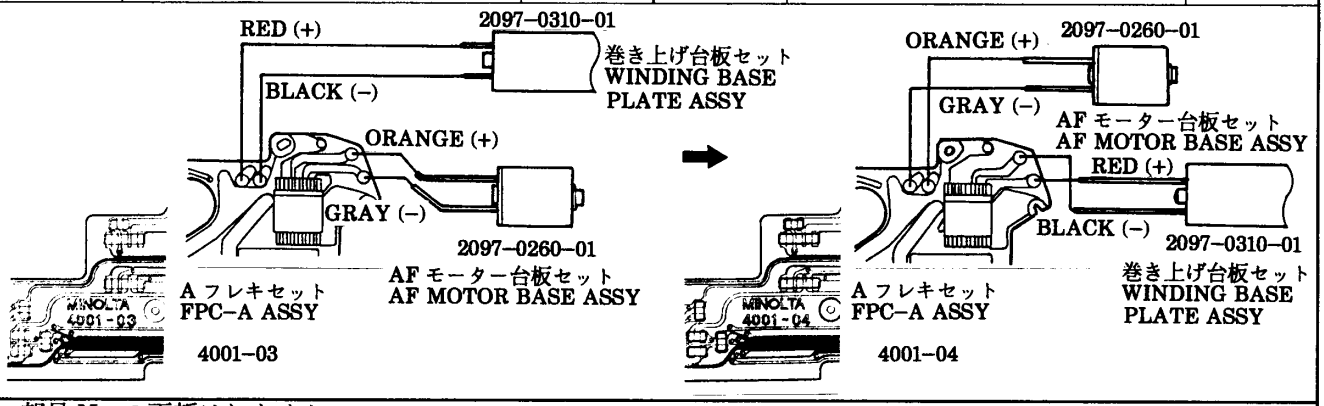

- 部品 No. の更新はしません。
- フレキのパターンまたは、フレキ No. を確認し配線を行って下さい。
- No change in parts No.
- Before wiring, discern the type by figures or patterns on the flex.

管理 No. REF No.	10–2097–006

■No. 006 Parts List P. 12 2097–277

変更理由 REASON	露出補正ロック釦作動の改善 / To improve E. C. Release SP operation			共通機種 COMMON MODEL	2097 Series	
Previous	2097–1496–03	→○	×←	2097–1496–04		New

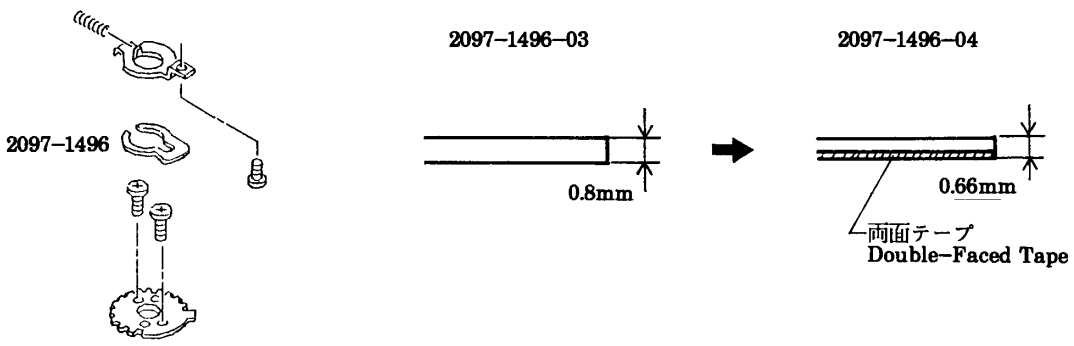

■本案内に従い、パーツリストへ転記等、メンテナンスを行って下さい。
According to this list, correct "Part List" in Service Manual for effective parts management.

MINOLTA CO.,LTD.

管理 No. REF No.	10-2097-007

PARTS MODIFICATION LIST

■No. 007 Parts List P. 5 2097-293

変更理由 REASON	生産都合 For efficient production	共通機種 COMMON MODEL	2097 Series

Previous	2097-5815-02	→×	×←	2097-5815-81	

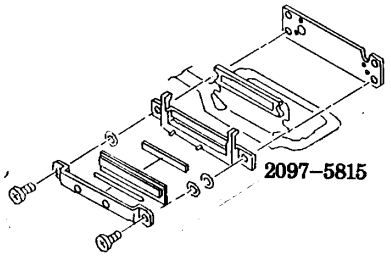

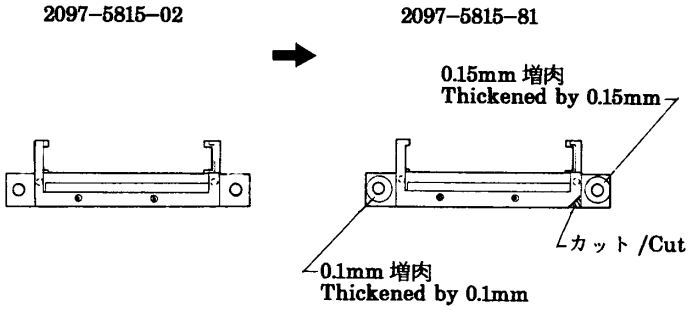

Previous	9790-1830-40	→--	--←	----------	New
Previous	9791-1830-40	→--	--←	----------	New
Previous					New

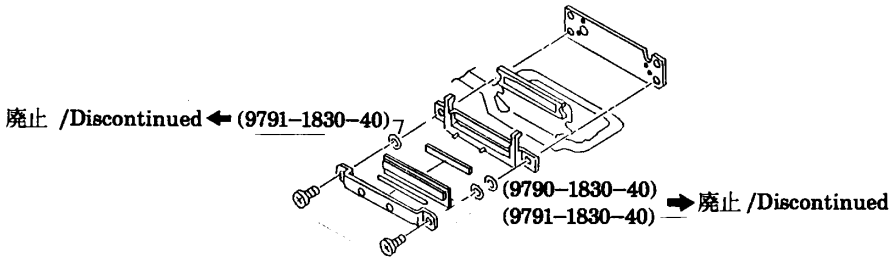

セットでの互換性 /Interchangeability as a set	Previous	→○	×←	New

■本案内に従い、パーツリストへ転記等、メンテナンスを行って下さい。
According to this list, correct "Part List" in Service Manual for effective parts management.

MINOLTA CO.,LTD.

管理No. REF No.	QS FA 2155-P004

PARTS MODIFICATION LIST

■No. 004 Parts List P. 8 仮-686

変更理由 REASON	サービス用部品として供給 Added as a service part			共通機種 COMMON MODEL	2155 Series
Previous	―――――――	――	――	(2017-0493-03)	New

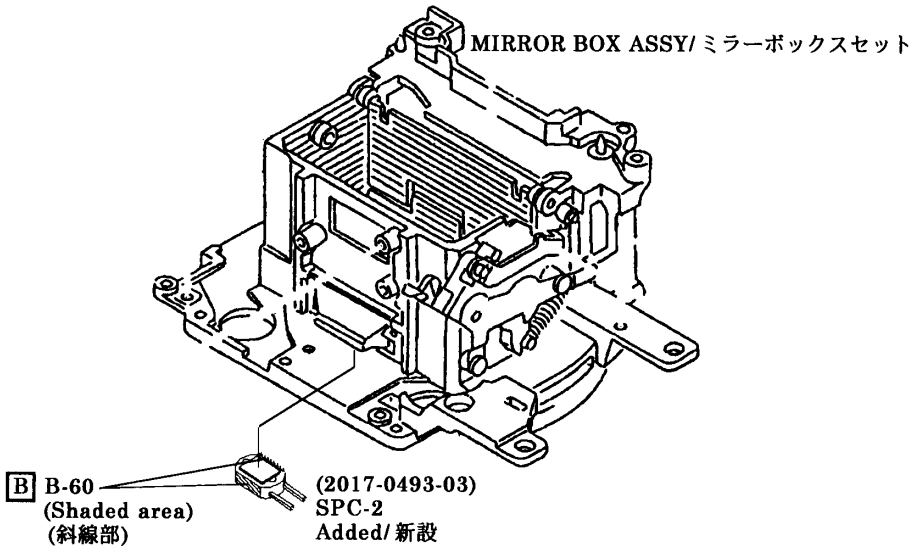

- SPC-2 #2017-0493-03 is applicable to these models; 2081, 2082, 2084, 2085, 2087, 2089, 2092, 2093, 2094, 2095, 2096, 2097, 2099, 2151, 2152, 2153, 2154, 2155.
- This PML for 2155 represents all models.
- Application availability is unknown to other models than above.
- SPC-2 (2017-0493-03)は以下の機種で共通使用可能です。
  但し、PMLは2155のみでの発行とします。
  2081, 2082, 2084, 2085, 2087, 2089, 2092, 2093, 2094, 2095, 2096, 2097, 2099, 2151, 2152, 2153, 2154, 2155.
- 上記機種以外では、未調査です。

■本案内状に従い、パーツリストへの転記等、メンテナンスを行なってください。
According to this list, correct "Parts List" in Service Manual for effective parts management.

MINOLTA CO.,LTD.

管理 No. REF No.	10–2097–008

PARTS MODIFICATION LIST

■No. 008 Parts List P. 2 2097–301

変更理由 REASON	シャッター性能の改善 To improve shutter operation			共通機種 COMMON MODEL	2097 Series	
Previous	2097–1362–01	→○	×←	2097–1362–03		New

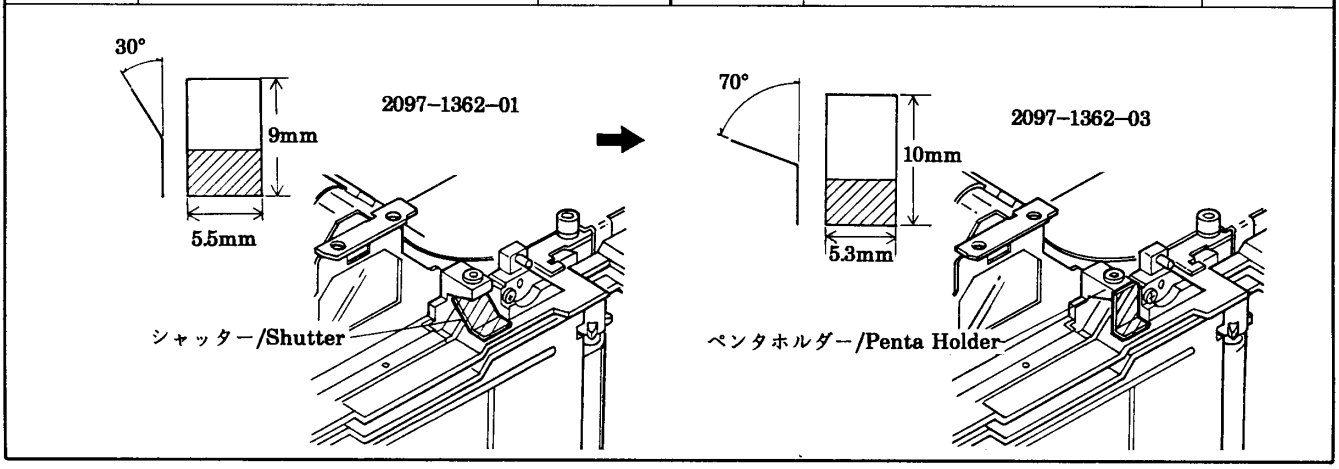

管理 No. REF No.	10–2097–009

■No. 009 Parts List P. 2 2097–306

変更理由 REASON	絶縁 For insulation			共通機種 COMMON MODEL	2097 Series	
Previous	————————	→—	—←	9384–2790–50		New

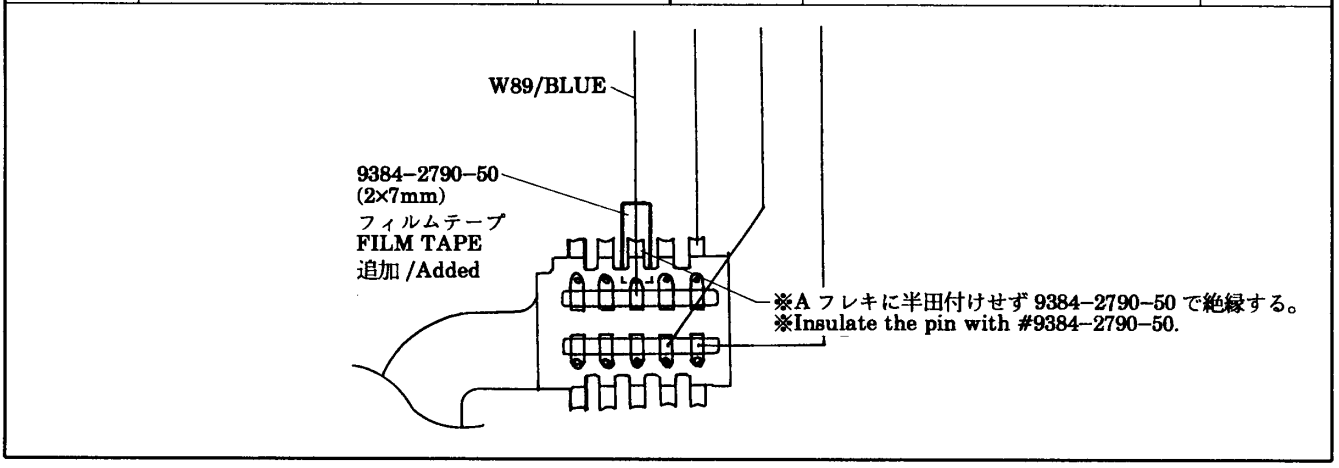

■本案内に従い、パーツリストへ転記等、メンテナンスを行って下さい。
According to this list, correct "Part List" in Service Manual for effective parts management.

MINOLTA CO.,LTD.

管理 No. REF No.	10-2097-010

PARTS MODIFICATION LIST

■No. 010 Parts List P. 5 2097-306

変更理由 REASON	絶縁→生産都合 For insulation→ For efficient production			共通機種 COMMON MODEL	2097 Series	
Previous	----------	→ --	-- ←	9384-2790-50		New
Previous	9384-2790-50	→ --	-- ←	----------		New

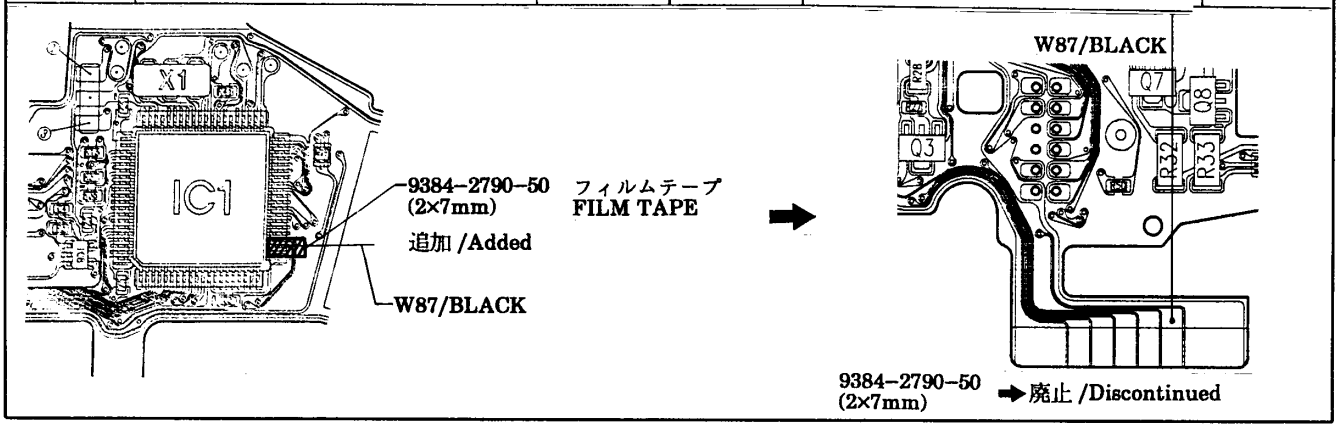

管理 No. REF No.	10-2097-011

■No. 011 Parts List P. 1 2097-319 SUPPLEMENTARY INFORMATION No. 2097-001

変更理由 REASON	Y 基板の作動改善 To improve operation			共通機種 COMMON MODEL	2097 Series	
Previous	2097-0472-01	→○	× ←	2097-0474-01		New
Previous	(9391-0807-04)	→ --	-- ←	(9391-0807-04)		New
Previous	(9391-0807-02)	→ --	-- ←	(9391-0807-02)		New
Previous	(9391-0807-00)	→ --	-- ←	9391-0807-09		New
Previous	(9391-0807-03)	→ --	-- ←	(9391-0807-03)		New
Previous	(9391-0807-06)	→ --	-- ←	(9391-0807-06)		New
Previous	(9391-0807-04)	→ --	-- ←	9391-0807-04		New

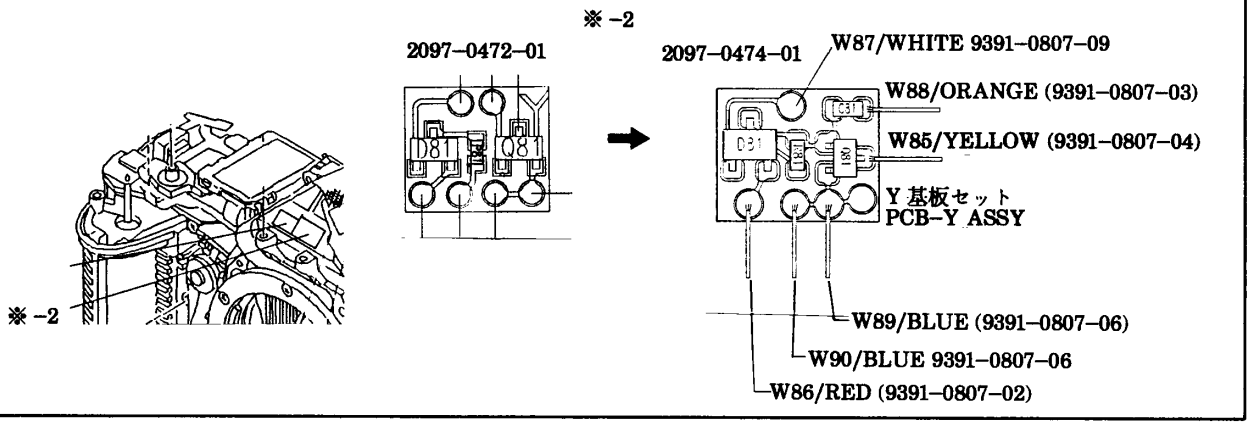

■本案内に従い、パーツリストへ転記等、メンテナンスを行って下さい。
According to this list, correct "Part List" in Service Manual for effective parts management.

MINOLTA CO.,LTD.

管理 No. REF No.	10-2097-012

PARTS MODIFICATION LIST

■No. 012 Parts List P. 5 2097-324

変更理由 REASON	光漏れ防止 / For better light shielding			共通機種 COMMON MODEL	2097 Series	
Previous	----------	→ --	-- ←	2097-5158-01		New

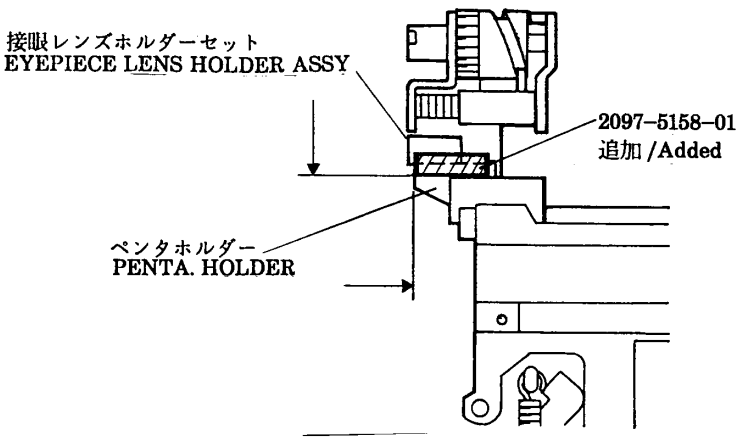

管理 No. REF No.	10-2097-013

■No. 013 Parts List P. 5 2097-328

変更理由 REASON	インファインダー表示ケラレ防止 / To prevent shadowing in viewfinder LCD			共通機種 COMMON MODEL	2097 Series	
Previous	----------	→ --	-- ←	2097-1039-81		New

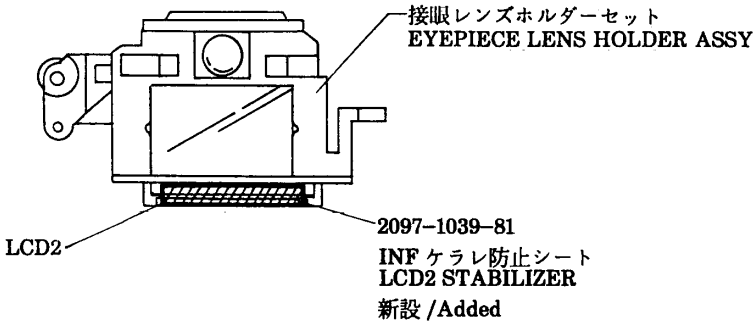

■本案内に従い、パーツリストへ転記等、メンテナンスを行って下さい。
According to this list, correct "Part List" in Service Manual for effective parts management.

MINOLTA CO.,LTD.

管理 No. REF No.	10-2097-014

PARTS MODIFICATION LIST

■No. 014 Parts List P. 14 5 2097-330

変更理由 REASON	HELP 21 改善 To prevent HELP 21			共通機種 COMMON MODEL	2097 Series	
Previous	----------	→ --	-- ←	9391-0807-01		New
Previous	----------	→ --	-- ←	9384-2790-50		New

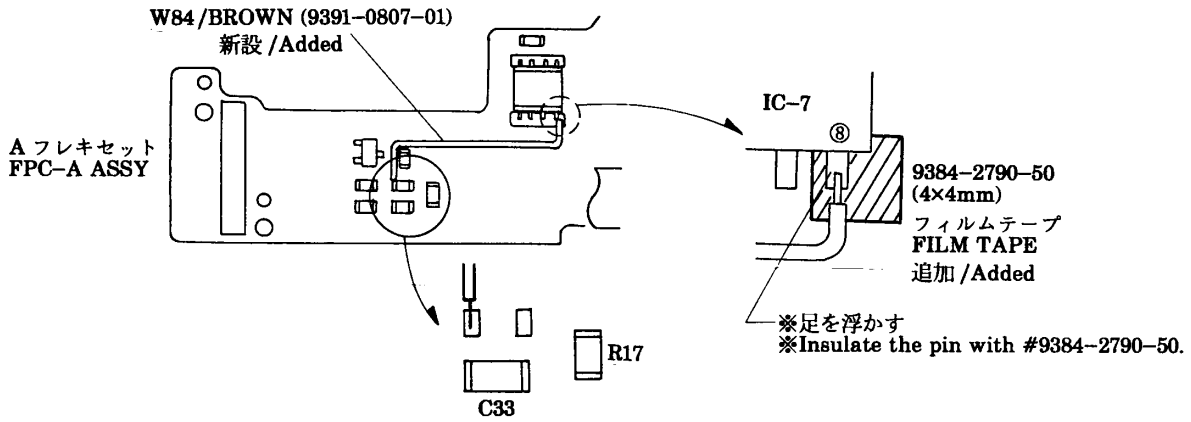

■本案内に従い、パーツリストへ転記等、メンテナンスを行って下さい。
According to this list, correct "Part List" in Service Manual for effective parts management.

MINOLTA CO.,LTD.

管理 No. REF No.	10–2097–015

PARTS MODIFICATION LIST

■No. 015 Parts List P. 1, 10 2097–275

変更理由 REASON	裏蓋ロックの改善 To improve Back–Cover Release operation	共通機種 COMMON MODEL	2097–100, –300

Previous	2097–0110–01	→×	×←	2097–0110–02	New

P. 10

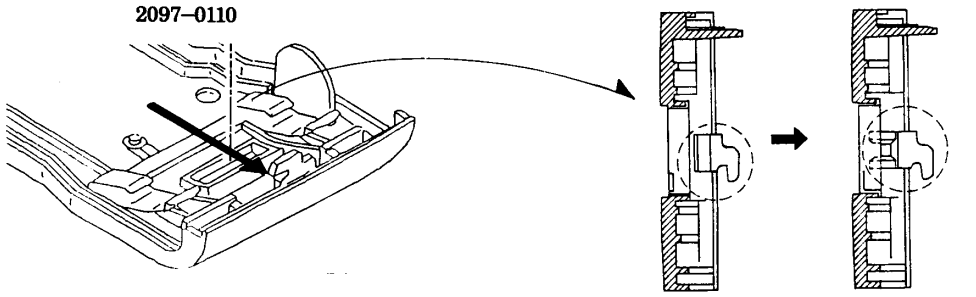

P. 10

Previous	2089–0121–01	→—	—←	2089–0121–01	New

P. 1

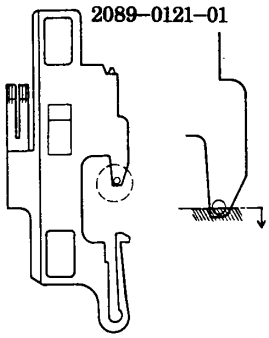

■斜線部をカットする
■Cut off the shaded part.

→

■カットしない
■Do not cut the shaded part.

P. 1

• 2097–0110–02 の場合、裏蓋ロックレバーセットのカットは不要です。
• Do not cut off the shaded part when using #2097–0110–02.

セットでの互換性 /Interchangeability as a set	Previous	→○	×←	New

■本案内に従い、パーツリストへ転記等、メンテナンスを行って下さい。
According to this list, correct "Part List" in Service Manual for effective parts management.

MINOLTA CO.,LTD.

管理 No. REF No.	10–2097–016

PARTS MODIFICATION LIST

■No. 016 Parts List P. 1, 11 2097–275

変更理由 REASON	裏蓋ロックの改善 To improve Back–Cover Release operation			共通機種 COMMON MODEL	2097–200, –600, –800
Previous	2097–0109–01	→×	×←	2097–0109–02	New

P. 11

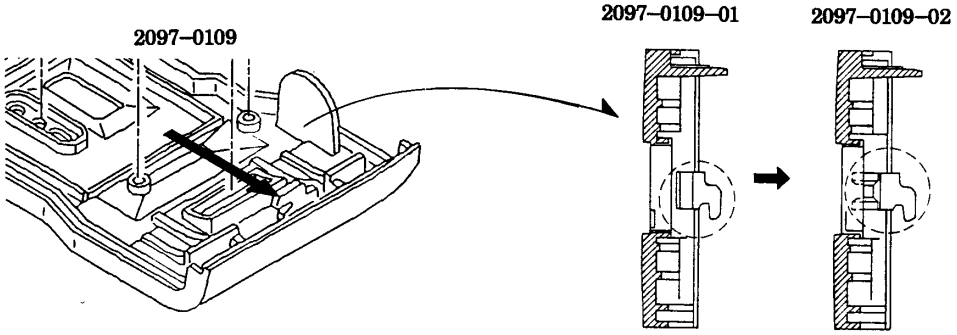

P. 11

Previous	2089–0121–01	→––	––←	2089–0121–01	New

P. 1

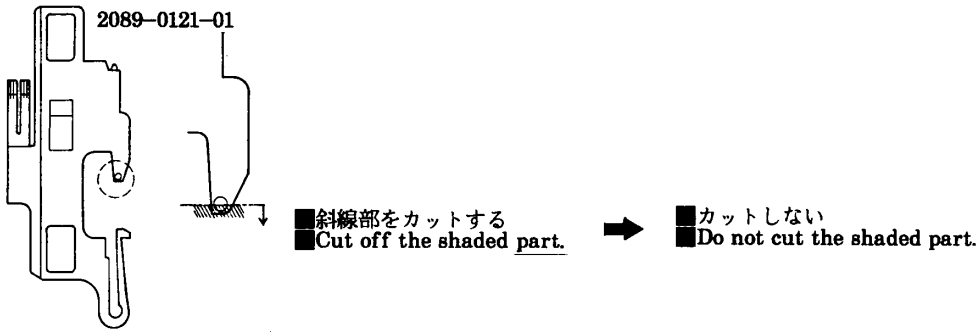

P. 1

• 2097–0109–02 の場合、裏蓋ロックレバーセットのカットは不要です。
• Do not cut off the shaded part when using #2097–0109–02.

セットでの互換性 /Interchangeability as a set	Previous	→○	×←	New

■本案内に従い、パーツリストへ転記等、メンテナンスを行って下さい。
According to this list, correct "Part List" in Service Manual for effective parts management.

MINOLTA CO.,LTD.

管理 No. REF No.	10-2097-017

PARTS MODIFICATION LIST

■No. 017 Parts List P. 5 2097-297

変更理由 REASON	生産都合 / For efficient production	共通機種 COMMON MODEL	2097 Series

Previous	2097-5815-81	→×	×←	2097-5815-04	New

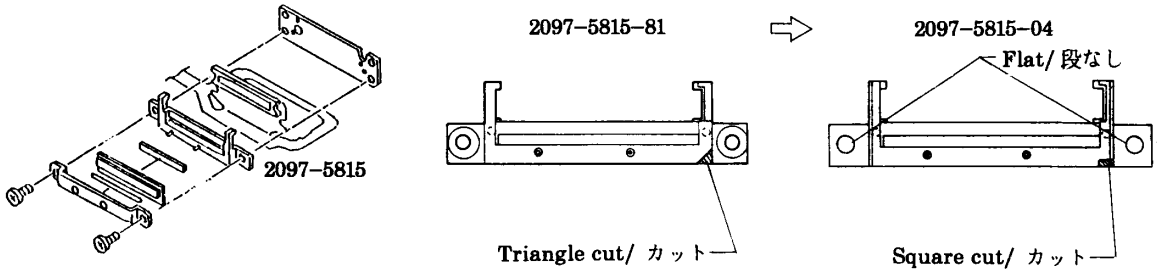

Previous	2097-1035-81	→--	--←	----------	New

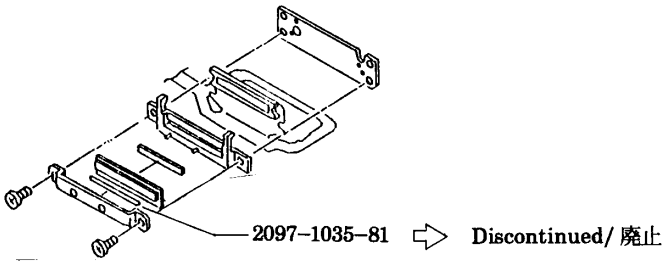

Previous	----------	→--	--←	9791-1830-40 (2)	New

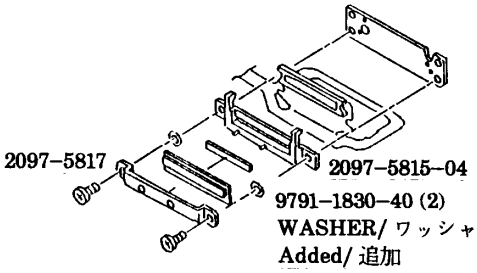

セットでの互換性 /Interchangeability as a set	Previous	→○	○←	New

管理 No. REF No.	QS FA 2152-P017

PARTS MODIFICATION LIST

■No. 017 Parts List P. 8 仮-616

変更理由 REASON	共通使用 For common use			共通機種 COMMON MODEL	See below. 下記参照
Previous	2072-1010-02	→○	○←	2072-1010-11	New
Previous	2072-1010-81	→○	○←	2072-1010-71	New

P. 7

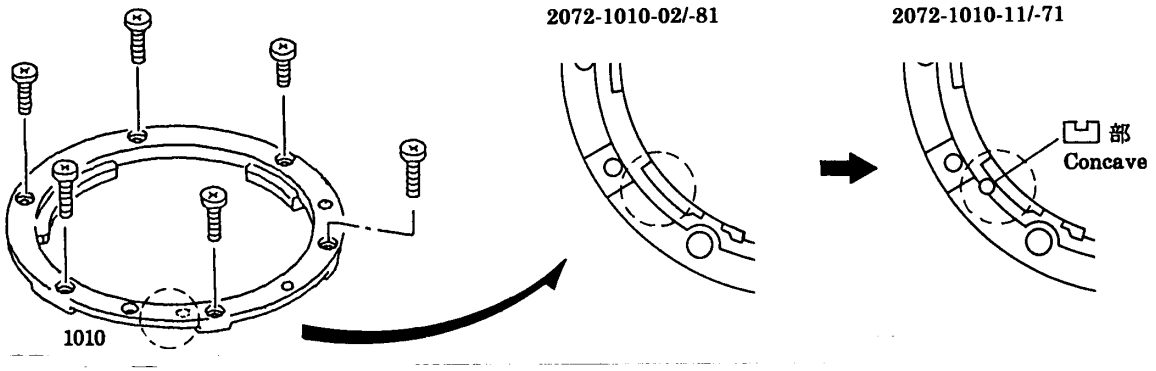

・#2072-1010-01/-11, #2072-1010-81/-71 are applicable to these models;
#2071, 2072, 2073, 2075, 2076, 2077, 2078, 2081, 2082, 2084, 2085, 2087, 2089, 2093, 2094, 2096, 2097, 2152.
Please apply this information to all models.
Respective PML will not be issued for all models.

・マウント#2072-1010-02 と-11 および#2072-1010-81 と-71 は以下の機種で共通です。
#2071, 2072, 2073, 2075, 2076, 2077, 2078, 2081, 2082, 2084, 2085, 2087, 2089, 2093, 2094, 2096, 2097, 2152.
#2152 以外の機種では PML を発行しませんので、各機種のパーツリストのメンテナンスを行なって下さい。

■本案内状に従い、パーツリストへの転記等、メンテナンスを行なって下さい。
According to this list, correct "Parts List" in Service Manual for effective parts management.

MINOLTA CO., LTD.

管理 No. REF No.	10-2097-018

PARTS MODIFICATION LIST

■No. 018 Parts List P. 12 2097-323

変更理由 REASON	パターン断線防止 To prevent pattern disconnection	共通機種 COMMON MODEL	2097-Series

Previous	2097-0418-01	→×	×←	2097-0418-02	New

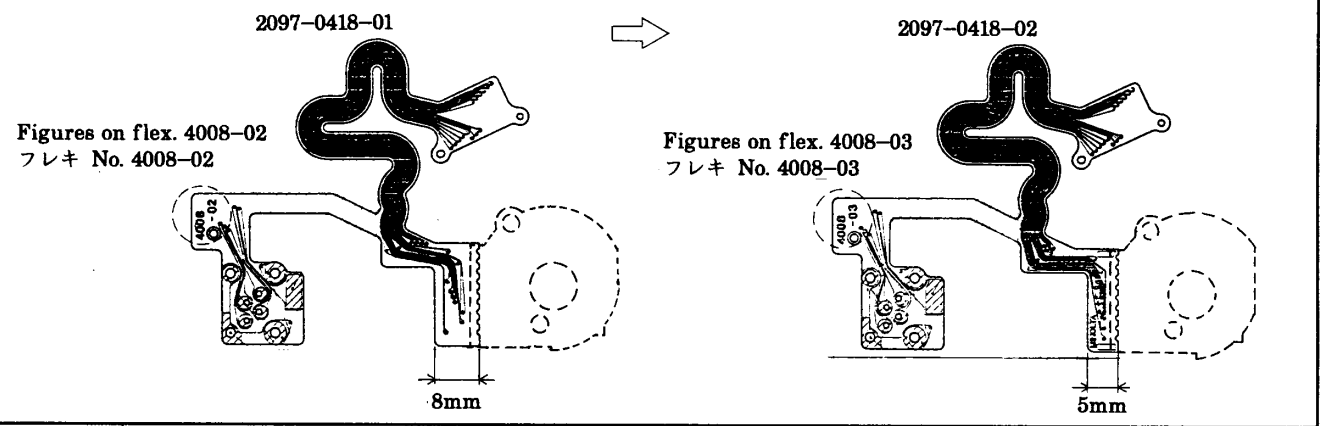

Previous	9384-2391-30	→—	—←	————————	New

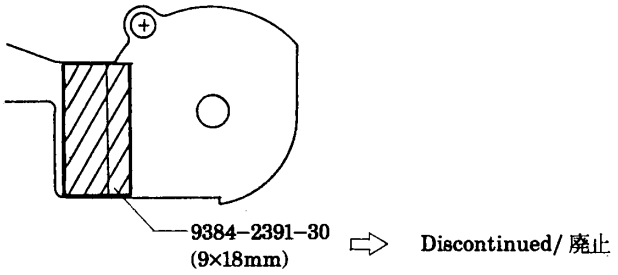

セットでの互換性 /Interchangeability as a set	Previous	→○	×←	New

■本案内に従い、パーツリストへ転記等、メンテナンスを行って下さい。
According to this list, correct "Part List" in Service Manual for effective parts management.

MINOLTA CO.,LTD.

管理 No. REF No.	10–2097–019

PARTS MODIFICATION LIST

■No. 019 Parts List P. 1, 5 2097–326

変更理由 REASON	生産都合 For efficient production	共通機種 COMMON MODEL	2097 Series

Previous	2097–0401–01	→×	×←	2097–0401–01	New

P. 5

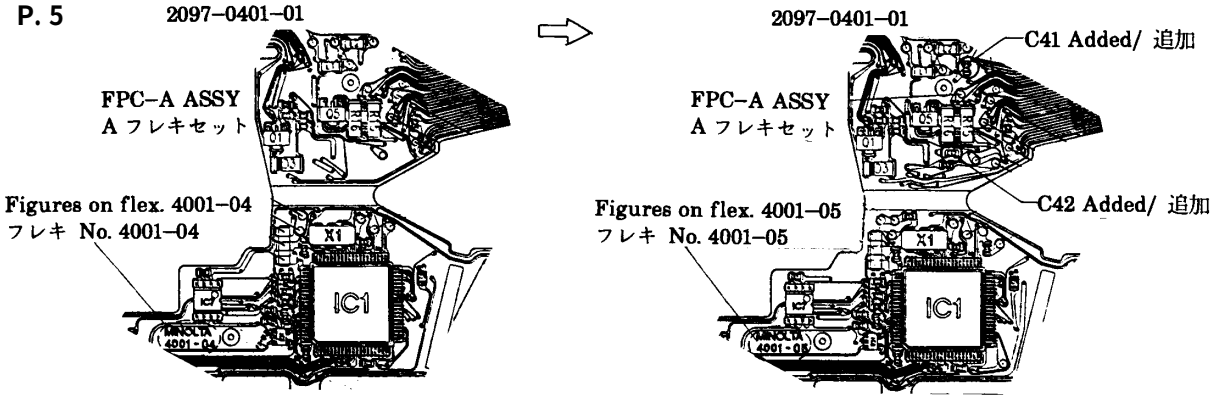

Previous	2097–0428–01	→—	—←	————————	New
Previous	9391–0807–07	→—	—←	————————	New
Previous	9391–0807–03	→—	—←	————————	New
Previous	9391–0807–01	→—	—←	————————	New

P. 1

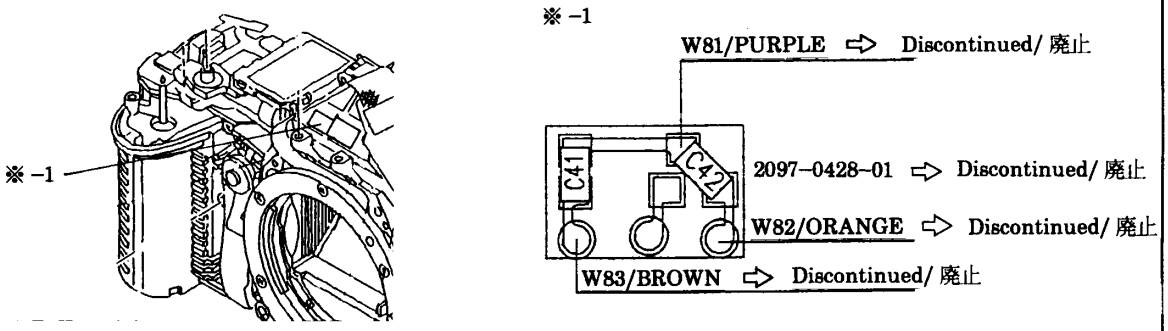

• 部品 No. の更新はしません。
• 素子の有無または、フレキ No. を確認し、X 基板セットの要・不要の判断を行って下さい。
• No change in parts No.
• Discern the type by figures on the flex. or existence of electrical elements. Only the older type requires PCB–X Assy.

セットでの互換性 /Interchangeability as a set	Previous	→○	○←	New

■本案内に従い、パーツリストへ転記等、メンテナンスを行って下さい。
According to this list, correct "Part List" in Service Manual for effective parts management.

MINOLTA CO.,LTD.

管理 No. REF No.	10–2097–020

PARTS MODIFICATION LIST

■No. 020 Parts List P. 8 2097–318

変更理由 REASON	パノラマファインダー遮光板作動の改善 To improve Panorama Frame Plate–D operation			共通機種 COMMON MODEL	2097–600, 800
Previous	2097–0277–01	→○	×←	2097–0277–02	New

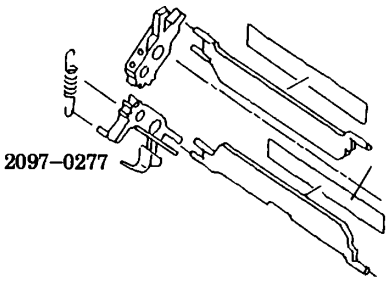

2097–0277–01 ⇨ 2097–0277–02

Black/黒 Gray/灰

■本案内に従い、パーツリストへ転記等、メンテナンスを行って下さい。
According to this list, correct "Part List" in Service Manual for effective parts management.

MINOLTA CO.,LTD.

管理 No. REF No.	10-2097-021

PARTS MODIFICATION LIST

■ No. 021 Parts List P. 5 2097-354

変更理由 REASON	AEL 釦作動改善 To improve operation	共通機種 COMMON MODEL	2097 Series

Previous	2097-1401-04	→×	×←	2097-1401-04	New

2097-1401-04
Type-1/ タイプ-1

2097-1401-04
Type-2/ タイプ-2

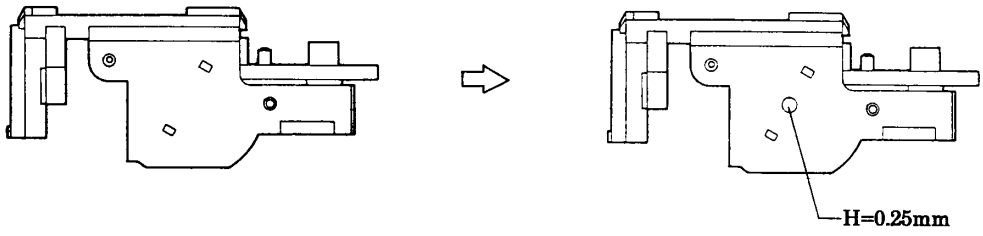

Previous	----------	→--	--←	2097-1039-81	New

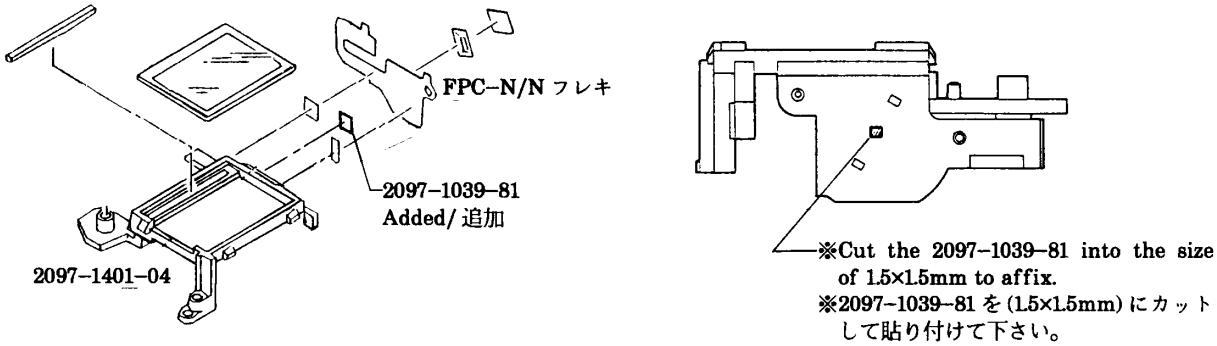

- 部品 No. の更新はしません。
- タイプ-1 にのみ 2097-1039-81 を貼り付けて下さい。
- No change in parts No.
- This part is needed only for the above type-1.

セットでの互換性 /Interchangeability as a set	Previous	→○	○←	New

■本案内に従い、パーツリストへ転記等、メンテナンスを行って下さい。
According to this list, correct "Part List" in Service Manual for effective parts management.

MINOLTA CO.,LTD.

管理 No. REF No.	10-2097-022

PARTS MODIFICATION LIST

■No. 022 Parts List P. 10 2097-356

変更理由 REASON	生産都合 For efficient production			共通機種 COMMON MODEL	2097-100, -300	
Previous	9747-1740-07	→○	×←	9747-1735-06		New

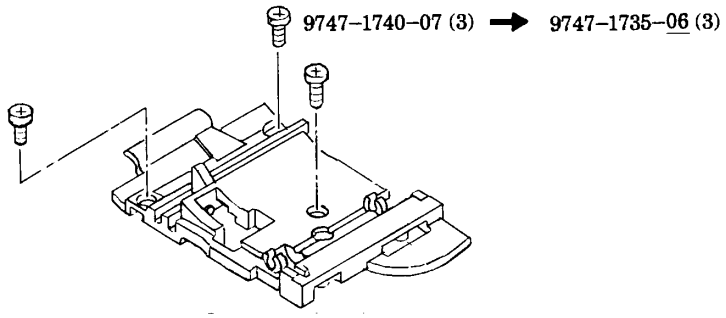

管理 No. REF No.	10-2097-023

■No. 023 Parts List P. 8 2097-315

変更理由 REASON	F ゴミ及び、はがれの改善 To prevent floating and viewfinder stain			共通機種 COMMON MODEL	2097-600, -800	
Previous	2092-2721-01	→○	×←	2097-2721-01		New

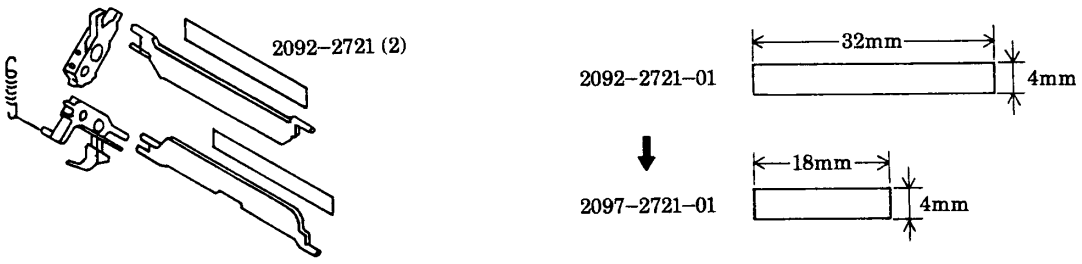

■本案内に従い、パーツリストへ転記等、メンテナンスを行って下さい。
According to this list, correct "Part List" in Service Manual for effective parts management.

MINOLTA CO.,LTD.

管理 No. REF No.	10-2097-024

PARTS MODIFICATION LIST

■ No. 024 Parts List P. 1 2097-314

変更理由 REASON	生産都合 For efficient production	共通機種 COMMON MODEL	2097 Series

Previous	2089-1618-01	→ --	-- ←	----------	New

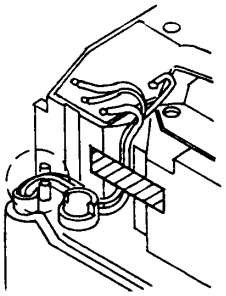

2089-1618-01 ➡ Discontinued/ 廃止

Previous	----------	→ --	-- ←	----------	New

Type-1/ タイプ-1

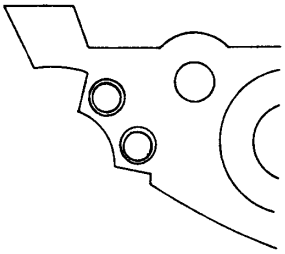

➡

Type-2/ タイプ-2

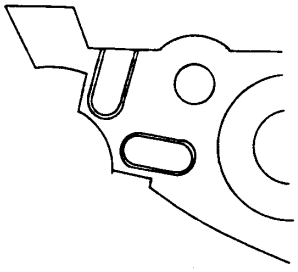

Body (Not available for service)
ボディ(サービス非供給)

- タイプ-1 のボディには 2089-1618-01 が必要です。
- #2089-1618-01 is still needed for the type-1 body.

セットでの互換性 /Interchangeability as a set	Previous	→○	○←	New

■本案内に従い、パーツリストへ転記等、メンテナンスを行って下さい。
According to this list, correct "Part List" in Service Manual for effective parts management.

MINOLTA CO.,LTD.

管理 No. REF No.	10-2097-025

PARTS MODIFICATION LIST

■ No. 025 Parts List P. 2 2097-314

変更理由 REASON	生産都合 / For efficient production	共通機種 COMMON MODEL	2097 Series

Previous	2097-1362-03	→ --	-- ←	----------	New

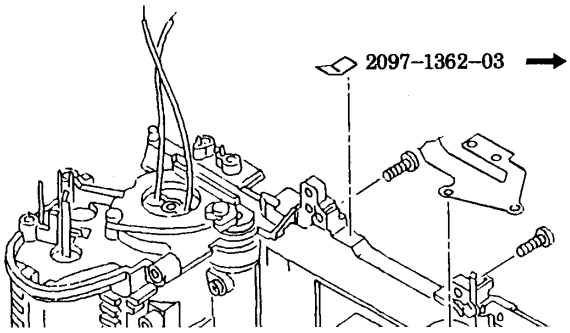

Previous	----------	→ --	-- ←	----------	New

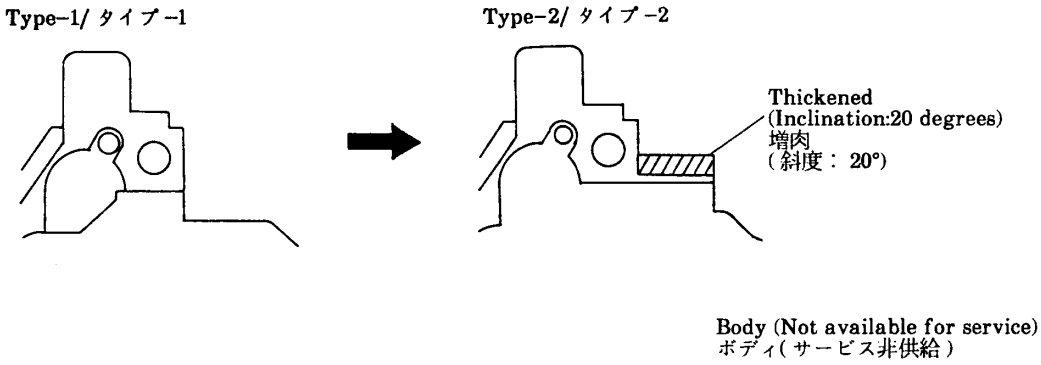

• タイプ-1 のボディには 2097-1362-03 が必要です。
• #2097-1362-03 is still needed for the type-1 body.

セットでの互換性 /Interchangeability as a set	Previous	→○	○←	New

■本案内に従い、パーツリストへ転記等、メンテナンスを行って下さい。
According to this list, correct "Part List" in Service Manual for effective parts management.

MINOLTA CO.,LTD.

管理 No. REF No.	10-2097-026

PARTS MODIFICATION LIST

■No. 026 Parts List P. 1 2097-359

変更理由 REASON	生産都合 For efficient production			共通機種 COMMON MODEL	2097 Series	
Previous	2097-0139-01	→ --	-- ←	2097-0139-01		New

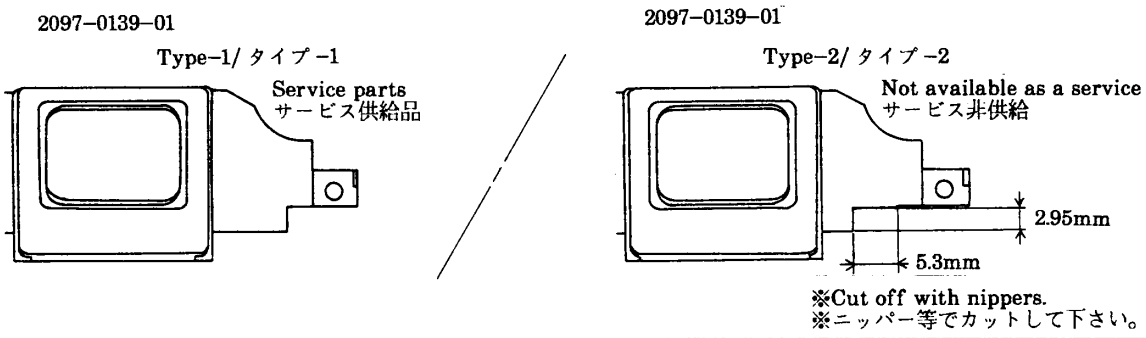

- 製品に取り付いているタイプで使用して下さい。
- タイプ-2の場合、サービス供給品のタイプ-1をカットし使用して下さい。
- There are two types of #0139-01 installed in products.
- If the type-2 is installed, cut off designated corner of the type-1.

■本案内に従い、パーツリストへ転記等、メンテナンスを行って下さい。
According to this list, correct "Part List" in Service Manual for effective parts management.

MINOLTA CO.,LTD.

管理 No. REF No.	10-2097-027

PARTS MODIFICATION LIST

■No. 027 Parts List P. 1, 5 2097-350 SUPPLEMENTARY INFORMATION No. 2097-003

変更理由 REASON	IC-1 バージョンアップ IC-1 update	共通機種 COMMON MODEL	2097 Series

Previous	2097-0401-01	→×	×←	2097-0401-02	New

P. 5

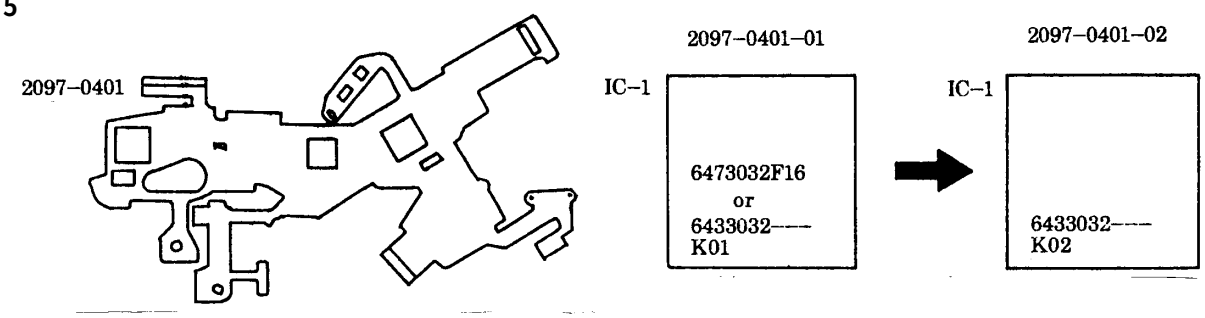

Previous	2097-0474-01	→--	--←	----------	New
Previous	(9391-0807-04)	→--	--←	----------	New
Previous	(9391-0807-02)	→--	--←	----------	New
Previous	9391-0807-09	→--	--←	----------	New
Previous	(9391-0807-03)	→--	--←	----------	New
Previous	(9391-0807-06)	→--	--←	----------	New
Previous	9391-0807-06	→--	--←	----------	New

P. 1

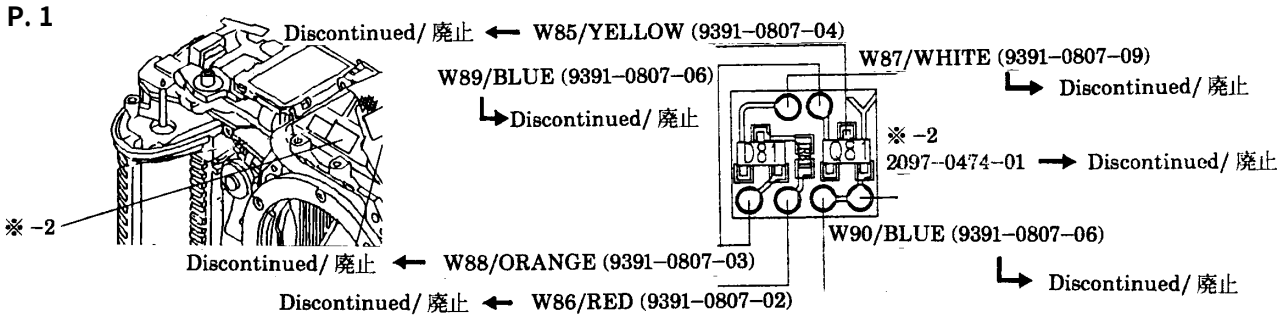

Previous	2097-0585-01	→--	--←	2097-0585-01	New
Previous	----------	→--	--←	(9431-1026-67)	New

P. 5

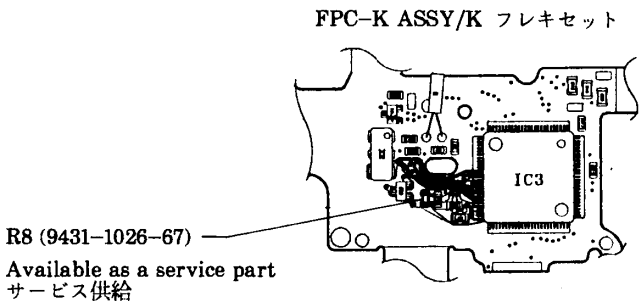

• K フレキセットの部品番号の更新はしませんが、R8 が付いているものと、付いていないものがあります。
• The FPC-K Assy with R8 installed has the some part No. as the FPC-K Assy without R8.

セットでの互換性 /Interchangeability as a set	Previous	→○	×←	New

■本案内に従い、パーツリストへ転記等、メンテナンスを行って下さい。
According to this list, correct "Part List" in Service Manual for effective parts management.

MINOLTA CO.,LTD.

管理 No. REF No.	10-2097-028

PARTS MODIFICATION LIST

■No. 028 Parts List P. 1 仮502

変更理由 REASON	管理 No. のみ変更 Change in parts No.			共通機種 COMMON MODEL	2089, 2092, 2097, 2099, 2420, 2428
Previous	2089-1060-01	→○	○←	2440-1991-02	New
Previous	2092-1060-01				
Previous	2097-1060-01				
Previous	2099-1060-01				
Previous	2420-1991-01				
Previous	2428-1991-01				

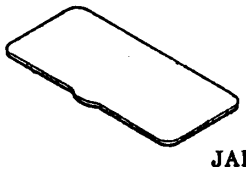

JAPAN

管理 No. REF No.	10-2097-029

■No. 029 Parts List P. 1 2440-80

変更理由 REASON	生産都合 For efficient production			共通機種 COMMON MODEL	2089, 2092, 2097, 2099, 2420, 2428
Previous	2440-1991-02	→○	○←	2440-1991-03	New

2440-1991-02

黒色 /Black

JAPAN

2440-1991-03

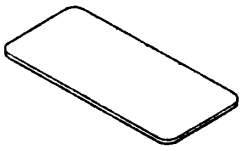

銀色 /Silver

■本案内に従い、パーツリストへ転記等、メンテナンスを行って下さい。
According to this list, correct "Part List" in Service Manual for effective parts management.

MINOLTA CO.,LTD.

管理 No. REF No.	QS FA 2097-P030

PARTS MODIFICATION LIST

■No. 030 Parts List P. 5 仮-537

変更理由 REASON	手配都合 For efficient parts supply			共通機種 COMMON MODEL	2097 Series	
Previous	----------	→--	--←	9366-4061-01		New

FPC-A Assy/A フレキセット

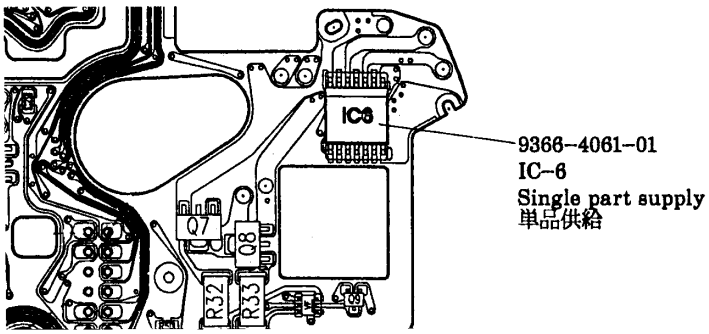

■本案内に従い、パーツリストへ転記等、メンテナンスを行って下さい。
According to this list, correct "Part List" in Service Manual for effective parts management.

MINOLTA CO.,LTD.

管理 No. REF No.	QS FA 2097-P031

PARTS MODIFICATION LIST

■ No. 031 Parts List P. 5 2097-385

変更理由 REASON	AEL 釦クリック感触の改善 For better AEL Button click	共通機種 COMMON MODEL	2097 Series

Previous	2097-1401-04	→○	×←	2097-1401-81	New

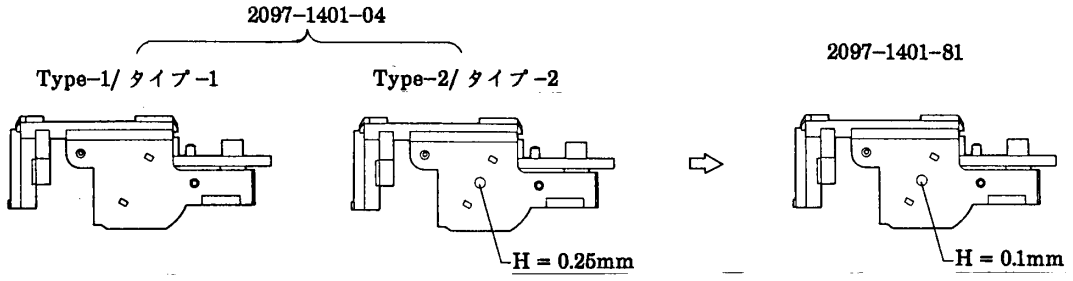

Previous	2097-1039-81	→ --	-- ←	----------	New

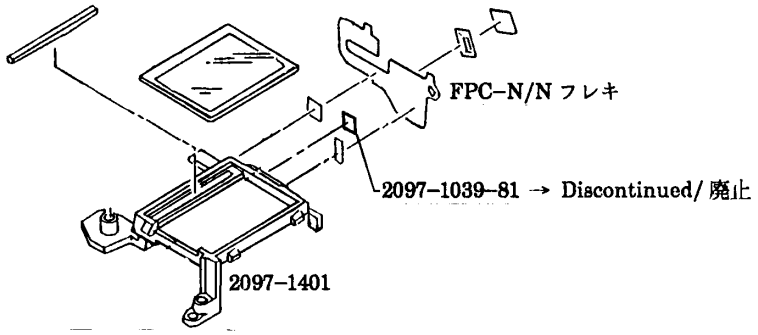

• #2097-1039-81 is still needed for type-1 of #1401-04.
• 1401-04 がタイプ-1 の場合、2097-1039-81 は必要です。

セットでの互換性 /Interchangeability as a set	Previous	→○	×←	New

■本案内に従い、パーツリストへ転記等、メンテナンスを行って下さい。
According to this list, correct "Part List" in Service Manual for effective parts management.

MINOLTA CO.,LTD.

管理 No. REF No.	QS FA 2097-P032

PARTS MODIFICATION LIST

■No. 032 Parts List P. 8

変更理由 REASON	生産都合 For efficient production			共通機種 COMMON MODEL	2097 Series	
Previous	————	——	——	2089-5112-01		New

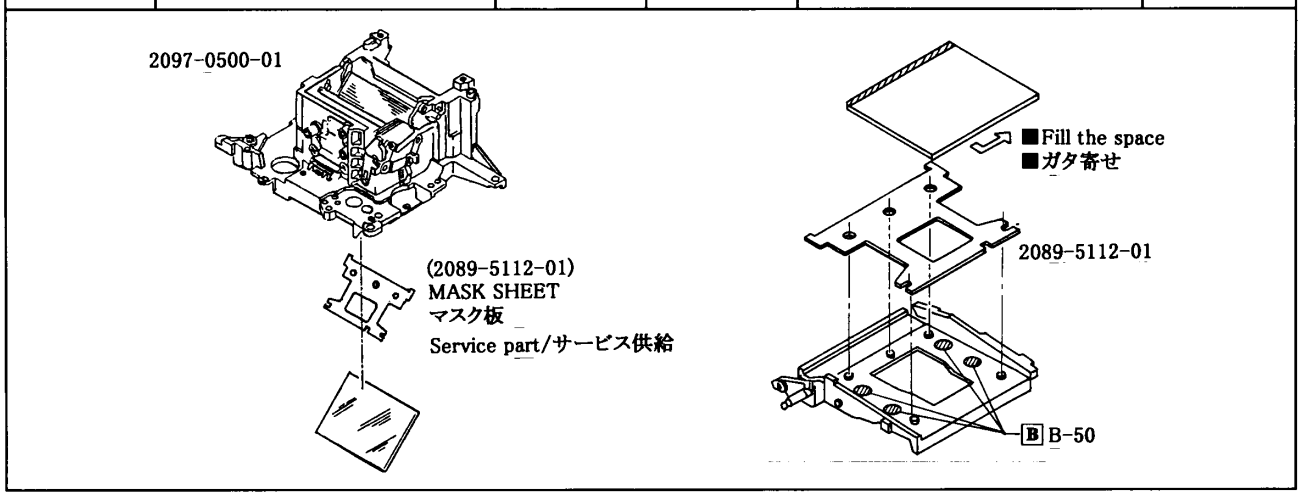

■本案内状に従い、パーツリストへの転記等、メンテナンスを行なって下さい。
According to this list, correct "Parts List" in Service Manual for effective parts management.
MINOLTA CO., LTD.

管理 No. REF No.	QS FA 2097-P033

PARTS MODIFICATION LIST

■No. 033 Parts List P. 1 2097-388

変更理由 REASON	生産都合 For efficient production			共通機種 COMMON MODEL	2097 Series	
Previous	2089-1152-01	——	——	2097-1152-01		New

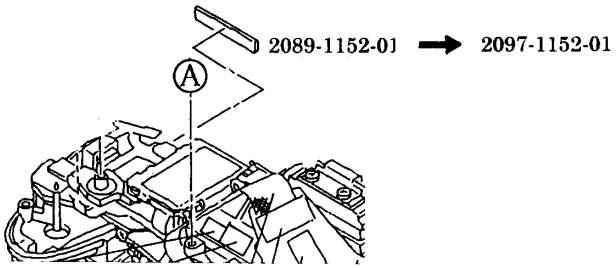

・Change in parts No. only
・部品番号のみ変更

管理 No. REF No.	QS FA 2097-P034

PARTS MODIFICATION LIST

■No. 034 Parts List P. 9 2097-396

変更理由 REASON	作動感触の向上 For smoother operation			共通機種 COMMON MODEL	2097 Series	
Previous	————	——	——	9791-1830-50		New

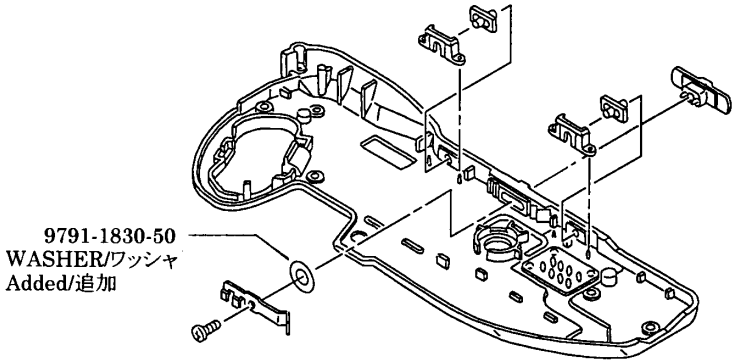

■本案内状に従い、パーツリストへの転記等、メンテナンスを行なって下さい。
According to this list, correct "Parts List" in Service Manual for effective parts management.
MINOLTA CO., LTD.

管理 No. REF No.	QS FA 2097-P035

PARTS MODIFICATION LIST

■No. 035 Parts List P. 5 2097-394

変更理由 REASON	IC-3 ロットによる LCD 表示の改善 For better LCD indication			共通機種 COMMON MODEL	2097 Series
Previous	2097-0585-01	→×	×←	2097-0585-02	New

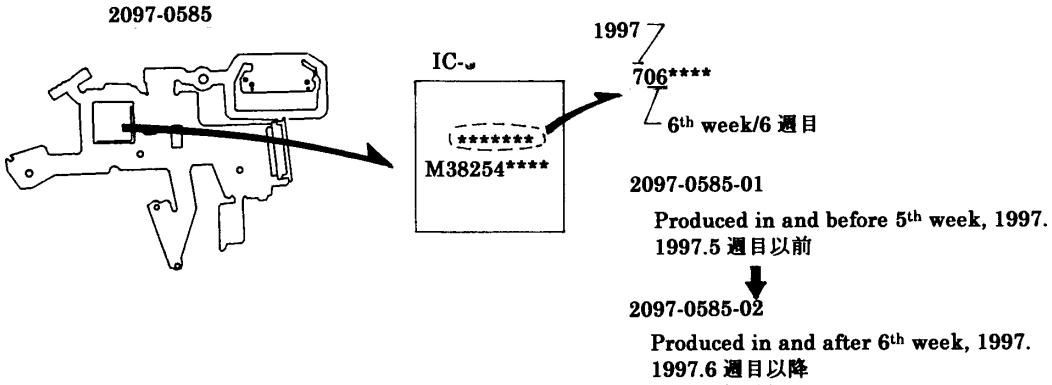

Previous	2097-0401-02	——	——	2097-0401-02	New
Previous	————	——	——	(9431-2246-75) or (9564-1048-70)	New

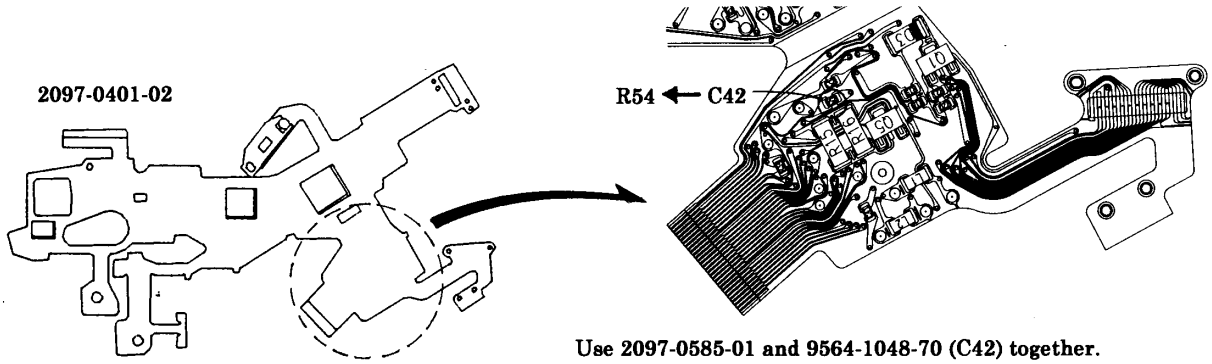

Use 2097-0585-01 and 9564-1048-70 (C42) together.
Use 2097-0585-02 and 9431-2246-75 (R54) together.

2097-0585-01 を使用する場合、9564-1048-70 (C42)を使用する。
2097-0585-02 を使用する場合、9431-2246-75 (R54)を使用する。

・FPC-A Assys delivered now and after include either C42 or R54.
・Replace the elements if necessary.
・今後、供給する A フレキセットには、C42 または R54 付きのものが混在します。
素子を確認後、必要であれば素子を交換し使い分けて下さい。

セットでの互換性/ Interchangeability as a set	Previous	→○	○←	New

■本案内状に従い、パーツリストへの転記等、メンテナンスを行なって下さい。
According to this list, correct "Parts List" in Service Manual for effective parts management.
MINOLTA CO., LTD.

管理 No. REF No.	QS FA 2097-P036

PARTS MODIFICATION LIST

■No. 036 Parts List P. 7 2097-406

変更理由 REASON	カプラー係止レバーの折れ防止 To prevent stop lever breakage			共通機種 COMMON MODEL	2097 Series
Previous	————	——	——	(9791-1830-50)	New

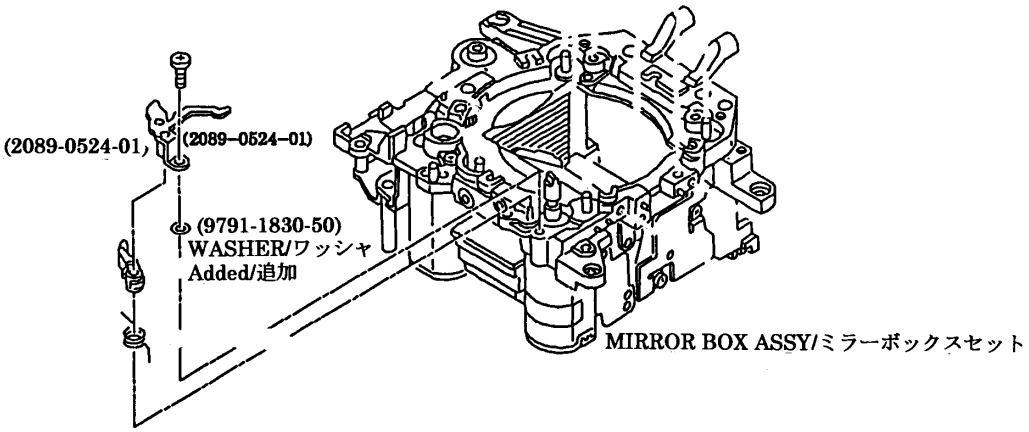

■本案内状に従い、パーツリストへの転記等、メンテナンスを行なって下さい。
According to this list, correct "Parts List" in Service Manual for effective parts management.
MINOLTA CO., LTD.

管理 No. REF No.	QS FA 2097-P037

PARTS MODIFICATION LIST

■No. 037 Parts List P. 4 2082-640

変更理由 REASON	電池接触面の改善 To improve battery contact	共通機種 COMMON MODEL	2097 Series

Previous	2082-1211-08	→×	×←	2082-1211-09	New

2082-1211-08 2082-1211-09

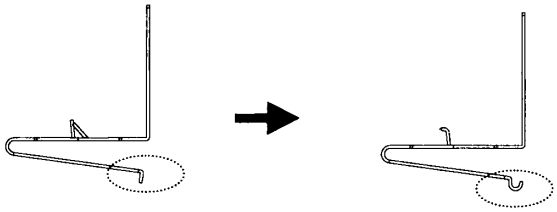

Previous	2082-1212-08	→×	×←	2082-1212-09	New

2082-1212-08 2082-1212-09

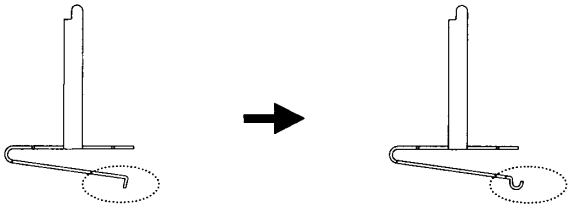

セットでの互換性/ Interchangeability as a set	Previous	→○	×←	New

■本案内状に従い、パーツリストへの転記等、メンテナンスを行なって下さい。
According to this list, correct "Parts List" in Service Manual for effective parts management.
MINOLTA CO., LTD.

Repair Guide

■Contents of this manual are in accordance with the assembly procedure.
Therefore, follow the reverse procedure when disassembling.
■Refer to Wiring diagram on Parts List, page 14 for wiring.

■Symbols
■ : Cautions and keypoints
[G] : Grease
[B] : Adhesive
[T] : Tool

CONTENTS Page

■Precautions ····· 2–3
[1]FPC–D Assy,
DX Contact Base Assy Installation ····· 4–5
[2]Winding Base Plate Assy,
Rewind Base Plate Assy Installation ····· 6–7
■Winding Base Plate Assy Operation Check ··· 7
[3]Mirror Box Assembly– I ····· 8–9
■Aperture Base Assy Installation ····· 9
[4]Mirror Box Assembly– II ····· 10
[5]Pentaprism, Penta Holder Installation ····· 11
[6]FPC–A Assy, FPC–K Assy,
Shutter Assy Installation ····· 12–13
■Mirror Operation Check ····· 14
[7]Flash Converter PCB Assy,
Mirror Box Assy Installation ····· 15–17
[8]External Parts Installation ····· 18–19
■Back Cover Assy Installation
(–100, –300) ····· 20
■Back Cover Assy Installation
(–200, –600, –800) ····· 21
■Top Cover Assy Assembly– I ····· 22–23
■Top Cover Assy Assembly– II ····· 24–25
■Front Cover Assy, Strap Eyelet (R),
Bottom Cover Assembly ····· 26

CONTENTS Page

■Adjustments/Checks Required After Repair ··· 27
■Preparation Before Adjustment–1 ····· 28
■Adjustment/Check Using 2097 ROM PACK ··· 29
■LCD Displays Check ····· 29
■Body Back Adjustment ····· 30
■Viewfinder Back Adjustment ····· 31
■1/4000 sec. SS Adjustment ····· 32
■Manual SS & X–Sync Time–Lag Check ····· 33
■AE Level Check/Aperture Control Check ····· 34
■Flash Level Check (using Strobe Tester) ····· 35
■AE Adjustment & Check ····· 36
■SPC Position Adjustment ····· 37
■SS Adjustment ····· 38
■Aperture Preset Adjustment ····· 39
■Flash Level Adjustment & Check ····· 40
■Pre–Flash Level Adjustment ····· 41
■Wireless Flash Level Adjustment ····· 42
■Frame Position Adjustment ····· 43
■B. C. Lock Voltage Adjustment ····· 44
■Preparation Before Adjustment–2
(AF adjustment) ····· 45
①AF Area Adjustment ····· 46
②Pitch, Yaw Adjustment ····· 47
③Flatness Adjustment ····· 48
④EZ Adjustment ····· 49
■Data Copy (included in Assist mode) ····· 50
■Error Code on HIT Controller ····· 51
■Tools & Instruments ····· 52
■Subsidiary materials ····· 52
■Temporary Top Cover ····· 53
■HIT Contact Jig–C Modification ····· 53
■AF Chart VI Modification ····· 54

■Precautions

■To discharge

• Before disassembly, be sure to discharge the main condenser as in Fig. 1.

■Fig. 1

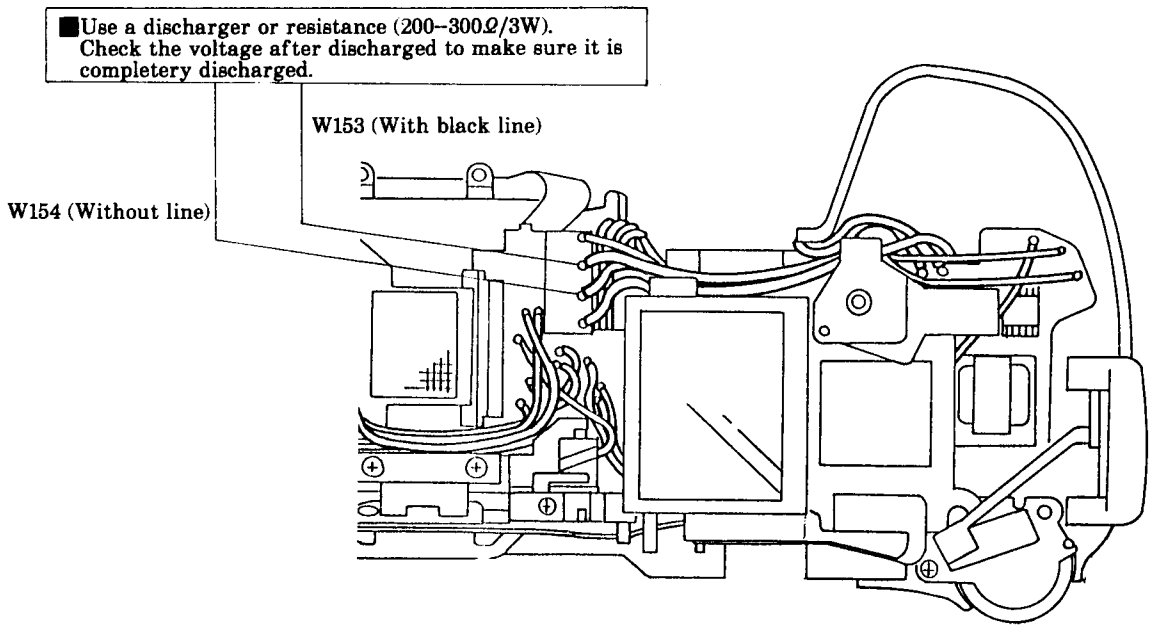

■To activate without Top Cover (Fig. 2)

• Solder indicated part–a on FPC–K Assy to short–circuit.

• Replacement FPC–K Assy is initially short–circuitted at the part–b.
When using the replacement FPC–K Assy, you don't need to short–circuit the part–a.

※Be sure to unsolder the part–a, or to cut the part–b before installing Top Cover.

■Fig. 2

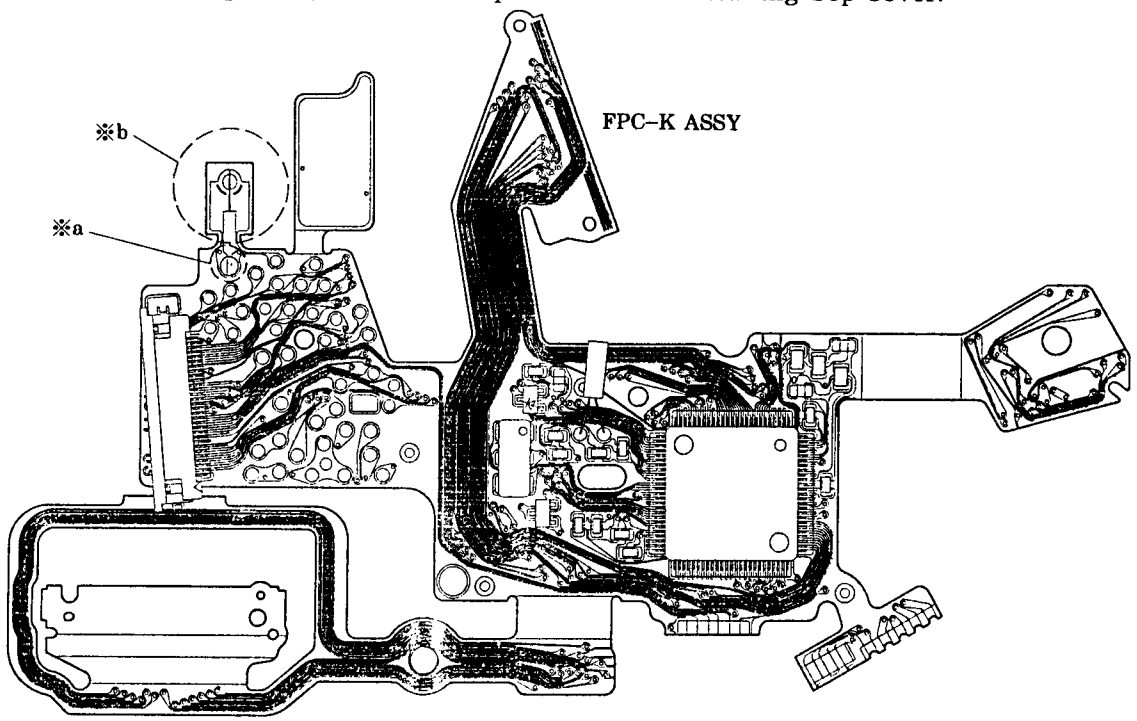

■Initial setting of FPC–A Assy

• Flash charge inhibited

※Flash Level Adjustment (page 40) will enable the flash charge.

■Precautions

■Chemicals

Handle chemicals of high volatility with care, use of which will affect to your health and the environment.

1. **Store them sealed in a specific place to prevent from exposure to a high temperature or direct sunlight.**
2. **Avoid dividing them into small containers and prevent from vaporization.**
3. **Keep containers sealed when not in use.**
4. **Avoid using them as much as possible. When required, remove only required amount from the container to make full use.**

■Plastic parts

1. **When cleaning the plastic parts, use cleaning paper or cloth**. Never use thinner, ketone, ether.
2. When installing the plastic parts, insert the specific screws vertically to the parts. (Be careful not to tighten too much.)

■PCBs

Since PCBs use MOS IC, you must reduce a static electricity. When repairing a PCB itself, or when wiring, please perform your work as illustrated above.
When grounding is impossible, connect the cable to a steel desk or shelf.

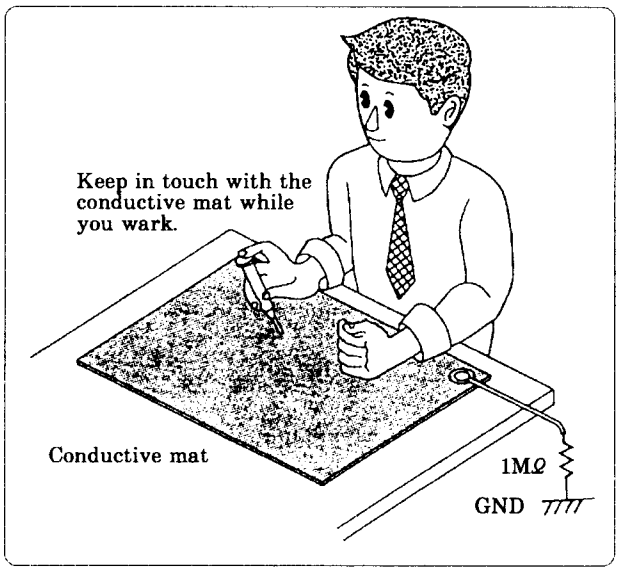

1 FPC–D Assy, DX Contact Base Assy Installation

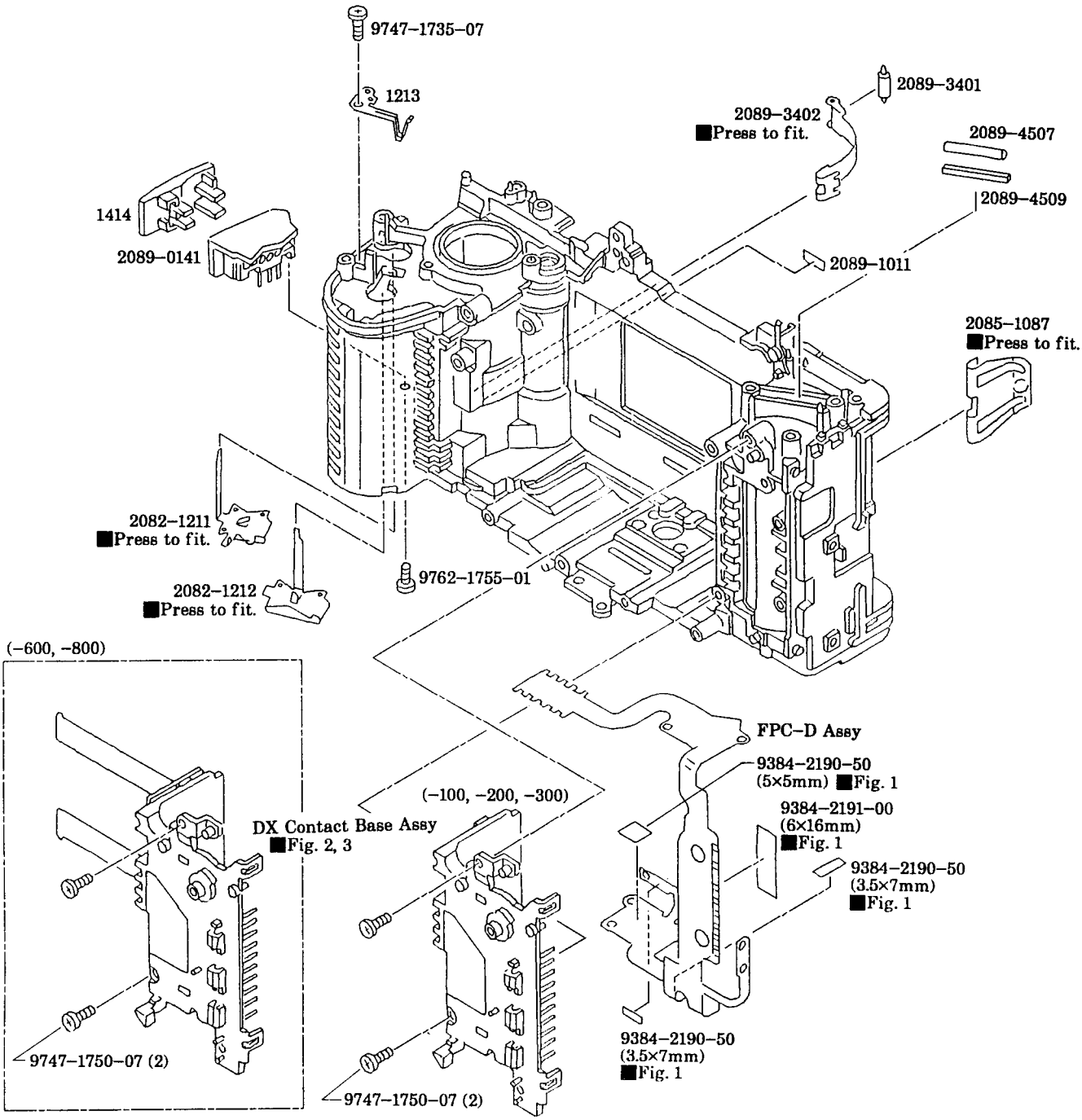

■Fig. 1

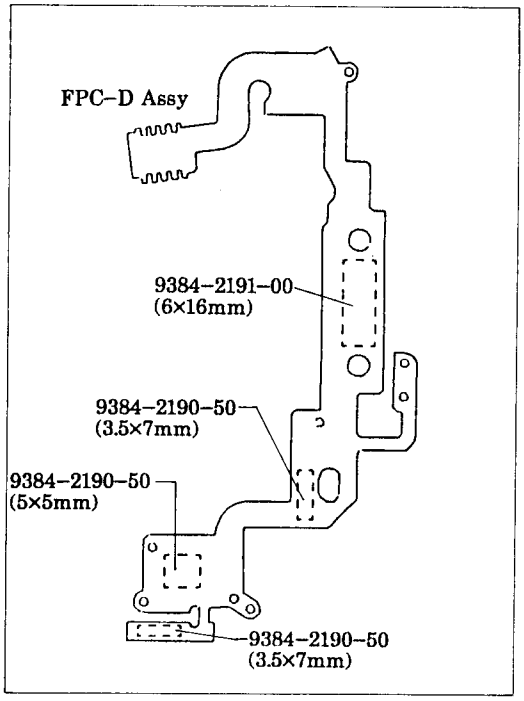

■Fig. 2

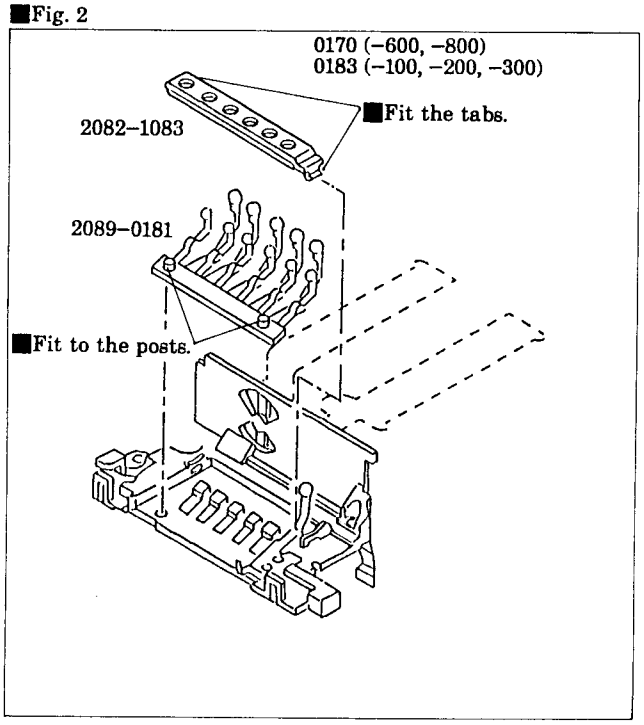

■Fig. 3

• DX Contact Base Assy Installation
1. Fit the post of DX Contact Base Assy to the hole of body.
2. Insert DX Contact Base Assy (××) to groove of body while hooking the eyelets.
3. Fasten 2 screws #9747–1750–07.
4. Solder indicated part of DX Contact Base Assy.

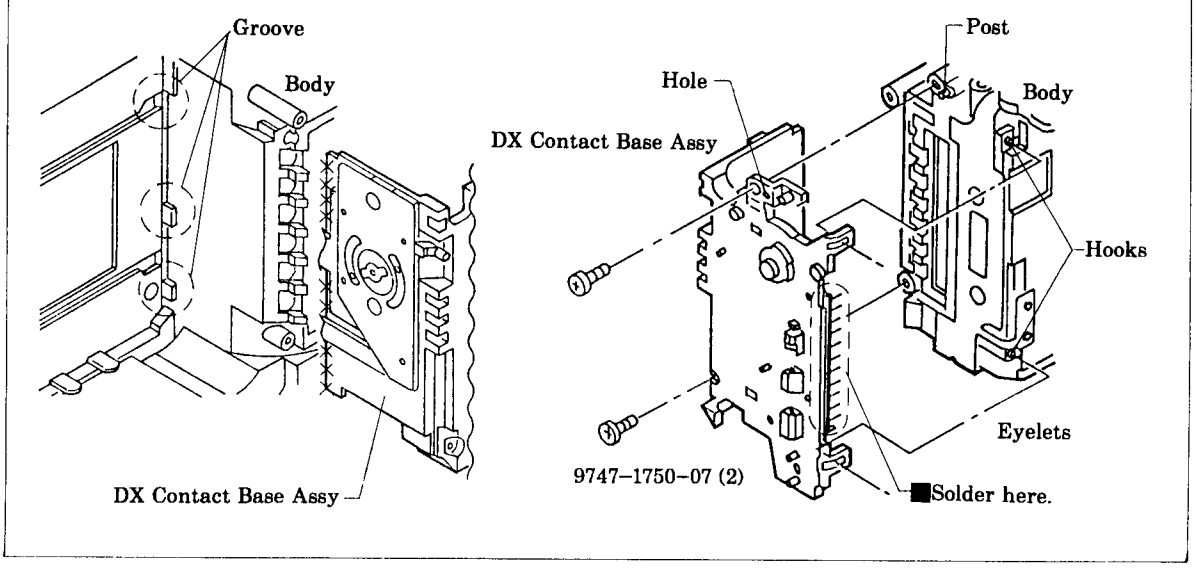

2 Winding Base Plate Assy, Rewind Base Plate Assy Installation

■Install in the order of ① to ④.

■Check the operation after replacing Winding Base Plate Assy (See P. 7.).

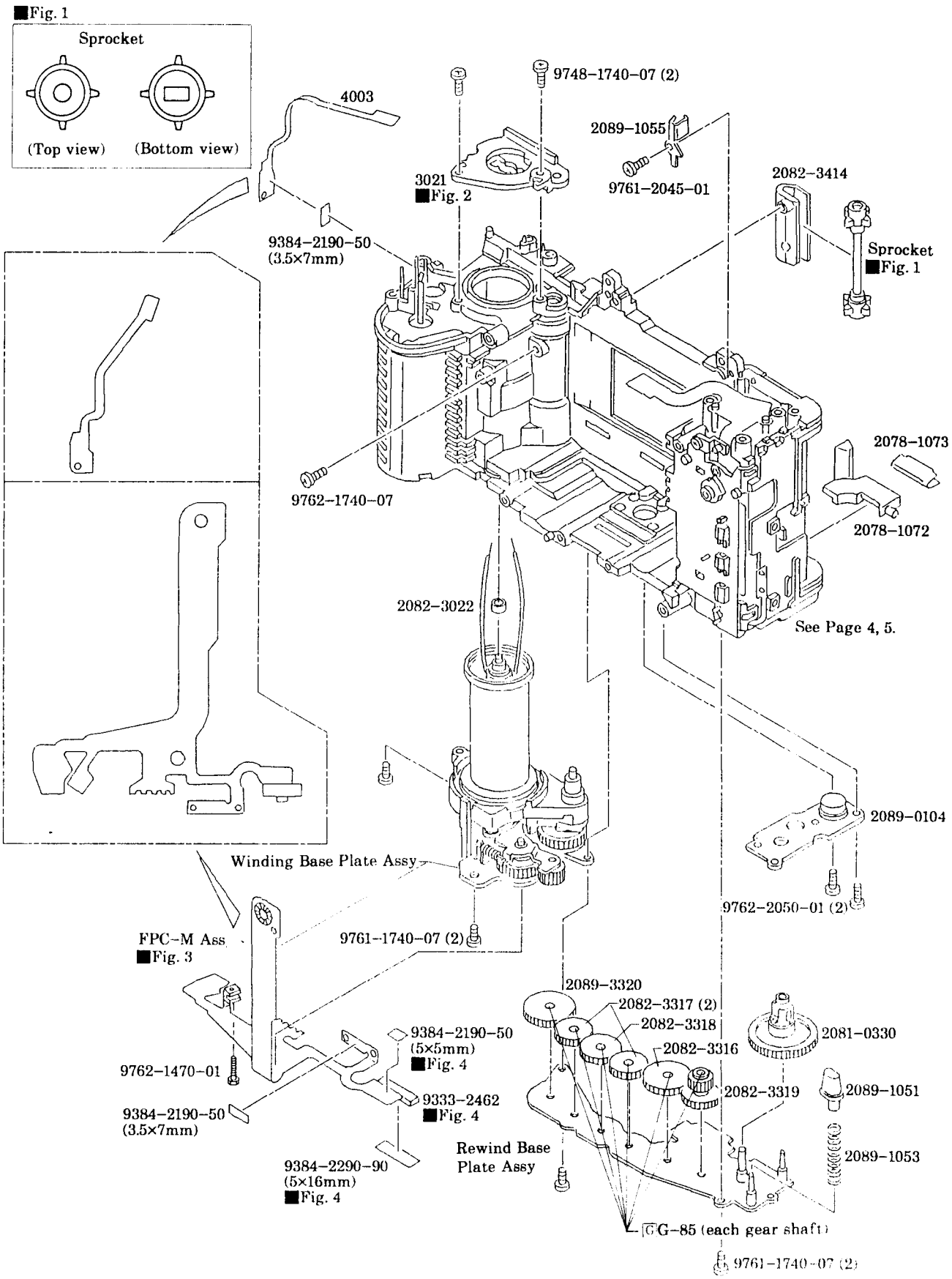

■Fig. 2

• Apply G–85 to shaded area.

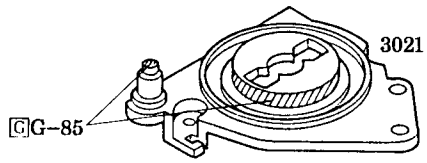

■Fig. 3

• Install PI of the FPC–M Assy to Winding Base Plate Assy fitting along the shaded area.

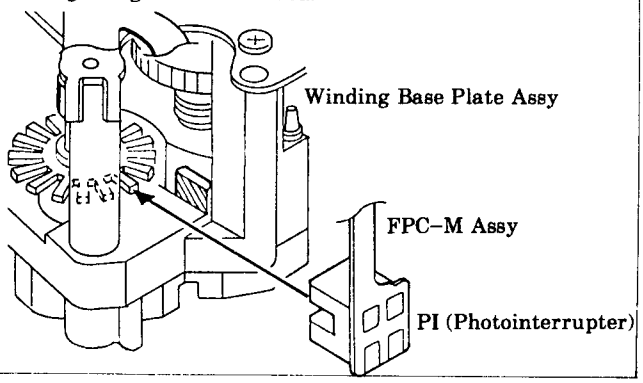

■Fig. 4

• Install the 9333–2462 fitting its posts to holes of the body.

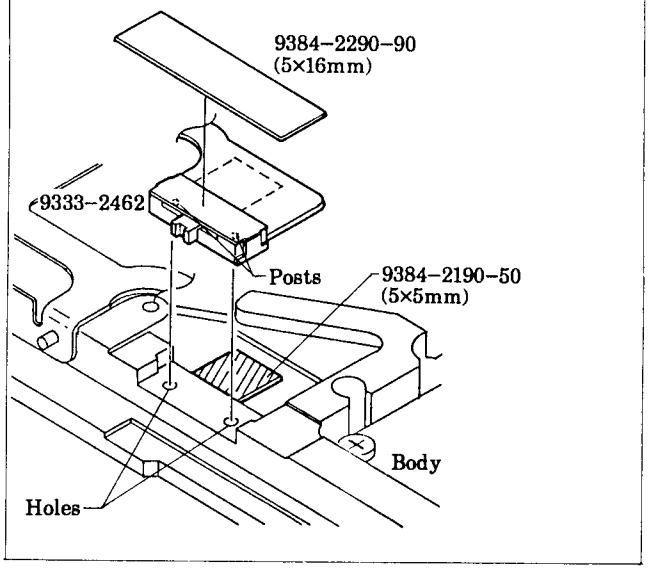

■Winding Base Plate Assy Operation Check

■Apply power (2V, 1A) to terminals using DC Power Supply as in Fig. 5.

(1)Planetary–Gear–A Operation

1. Connect the power supply to wires (black: +, red: –), and turn the power on.
2. Check that Planetary–Gear–A moves up and down according to drive of Changeover Cam.

(2)Operation at film advance

1. Connect the power supply to wires (black: +, red: –), and turn the power on.
2. Turn off the power supply when Planetary–Gear–A is set to the exact position "a" in Fig. 6.
3. Connect the power supply to wires (black: –, red: +), and turn the power on.
   Check that both spool and Planetary–Gear–A drive.

(3)Operation at film rewind

1. Connect the power supply to wires (black: +, red: –), and turn the power on.
2. Turn off the power supply when Planetary–Gear–A is set to the exact position "b" in Fig. 7.
3. Connect the power supply to wires (black: –, red: +), and turn the power on.
   Check that only Planetary–Gear–A drives. (Spool doesn't drive.)

■Fig. 5

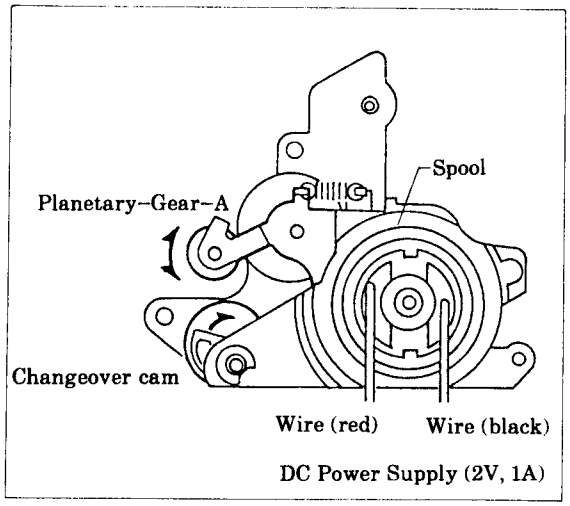

■Fig. 6

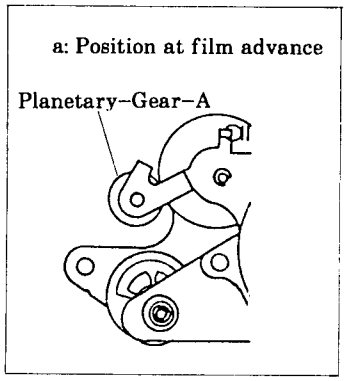

■Fig. 7

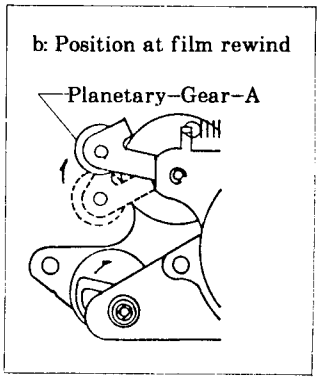

3 Mirror Box Assembly– I

■Assemble in the order of ① to ④.

■After assembly, perform Mirror Operation Check (1) referring to page 14.

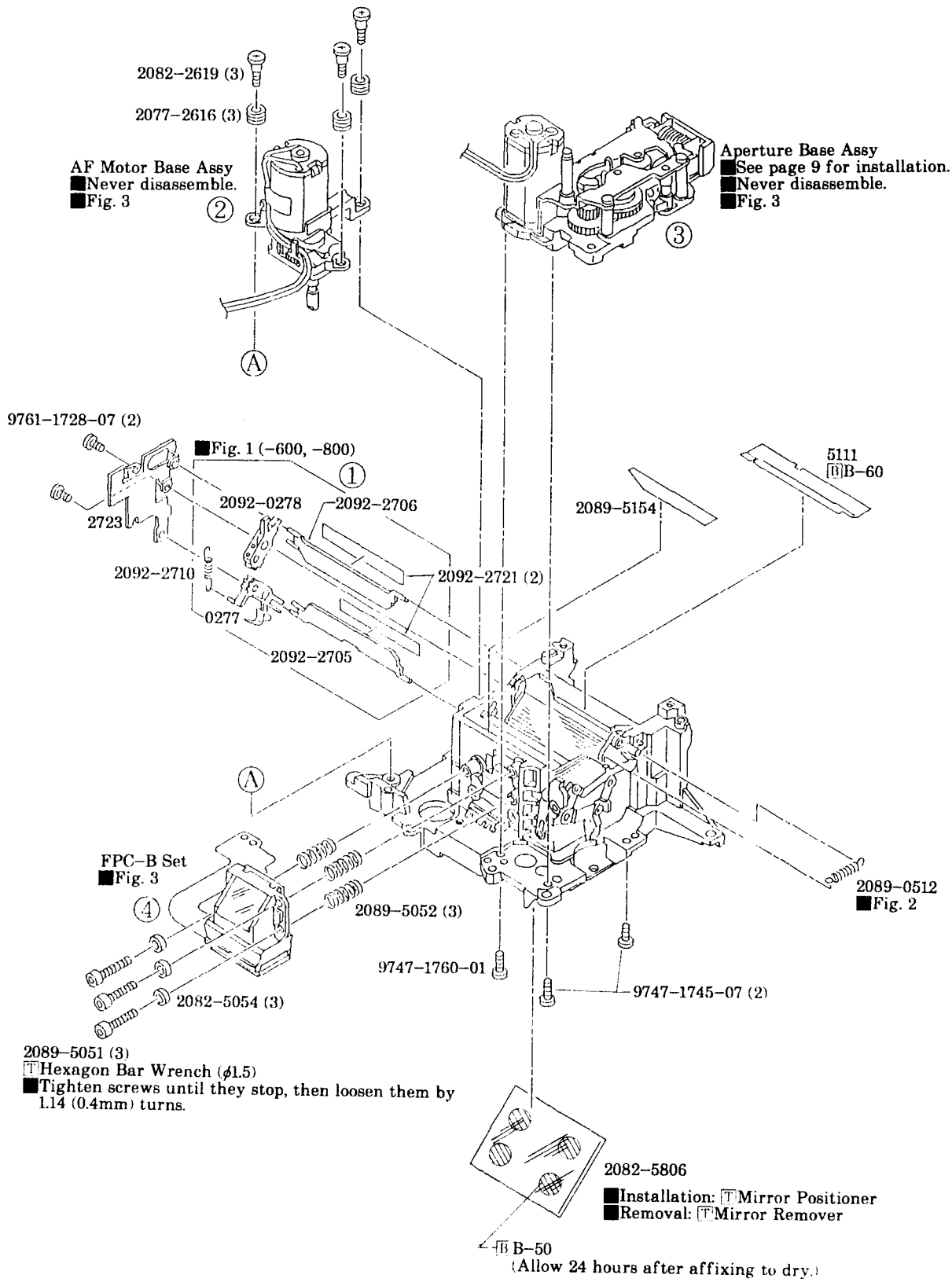

■Fig. 1 (–600, –800)

• Install Panorama Frames, Levers and Spring as shown.

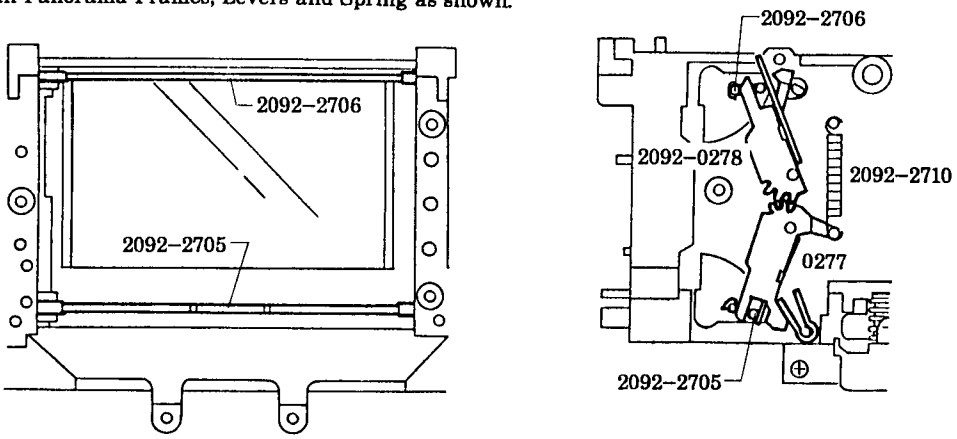

■Fig. 2

• Hook the 2089–0512 as shown.

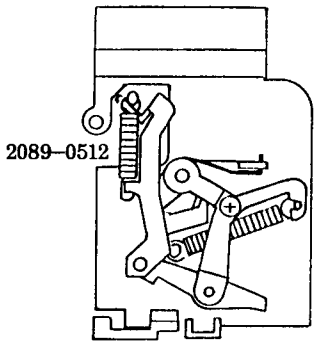

■Fig. 3

• FPC–B, shield wires, motor wires arrangement

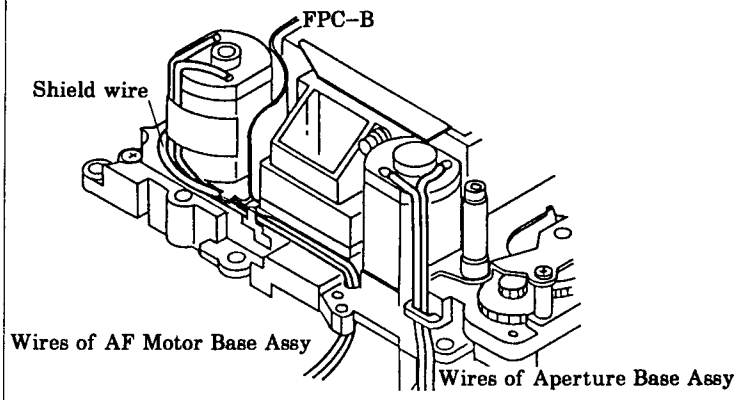

■Aperture Base Assy Installation

1. Turn Cam Gear in the direction of arrow until it stops in position shown in Fig. 4.
2. Check that the Release Lever is in position as shown in Fig. 4.
3. Install Aperture Base Assy to Mirror Box as in Fig. 5.

■Fig. 4

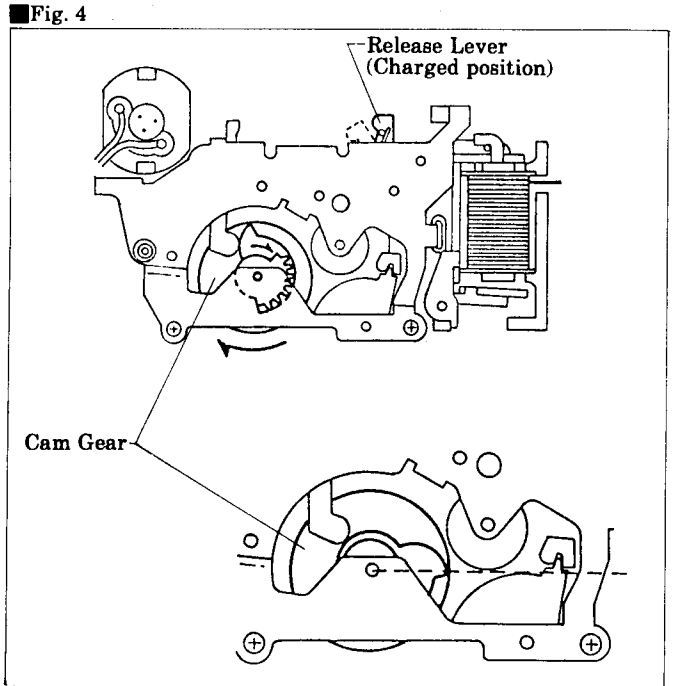

■Fig. 5

• Set the Mirror Charge and Release Levers in position before installing.

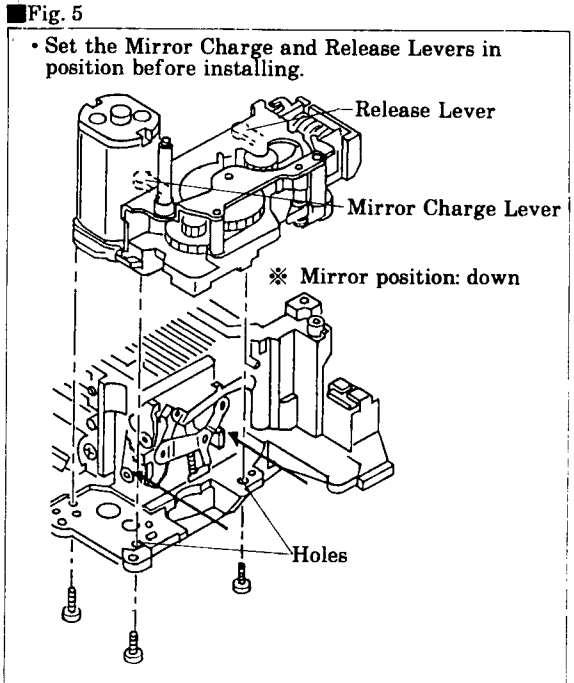

4 Mirror Box Assembly– II

■After assembly, perform "Mirror Operation Check (2)" referring to page 14.

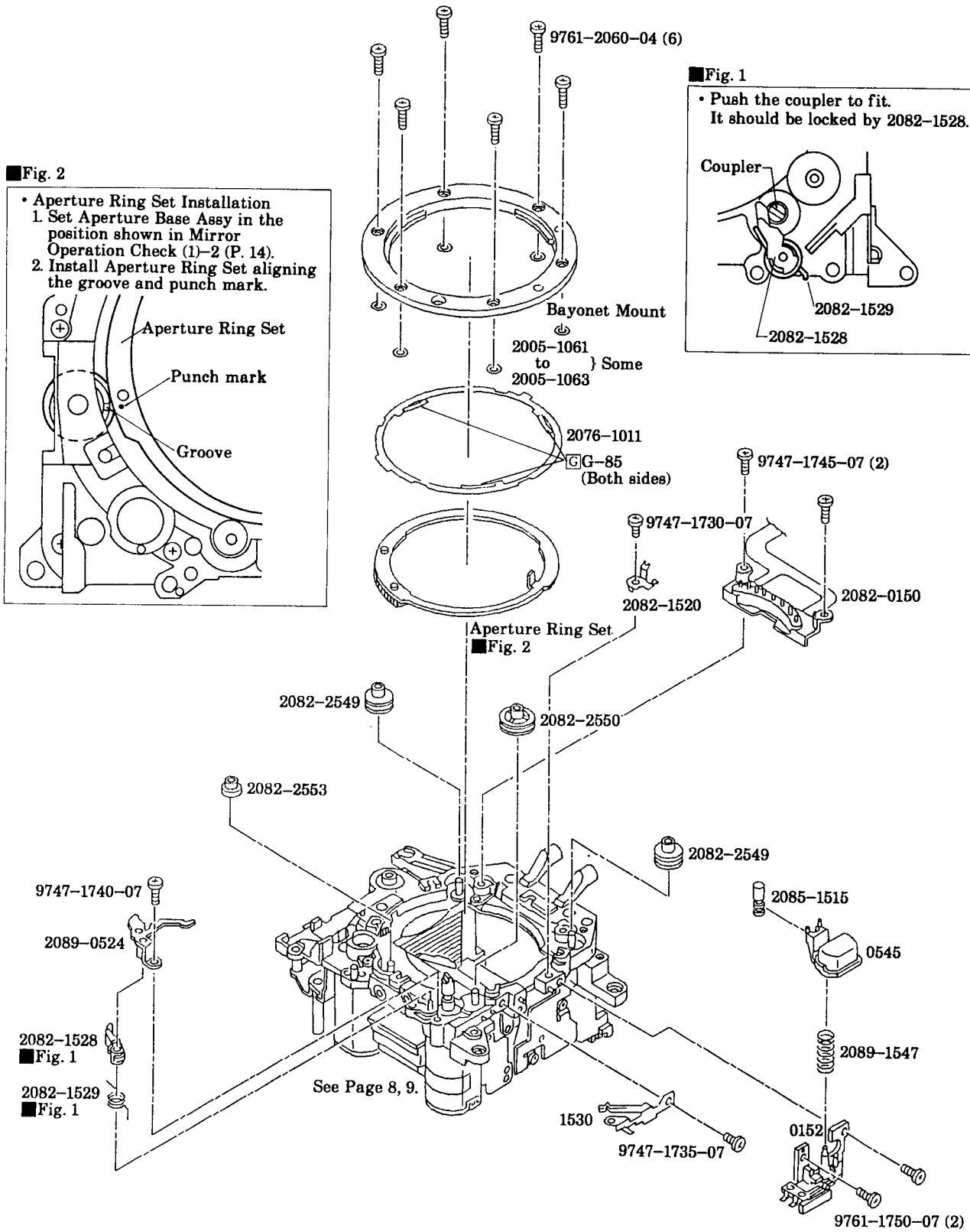

5 Pentaprism, Penta Holder Installation

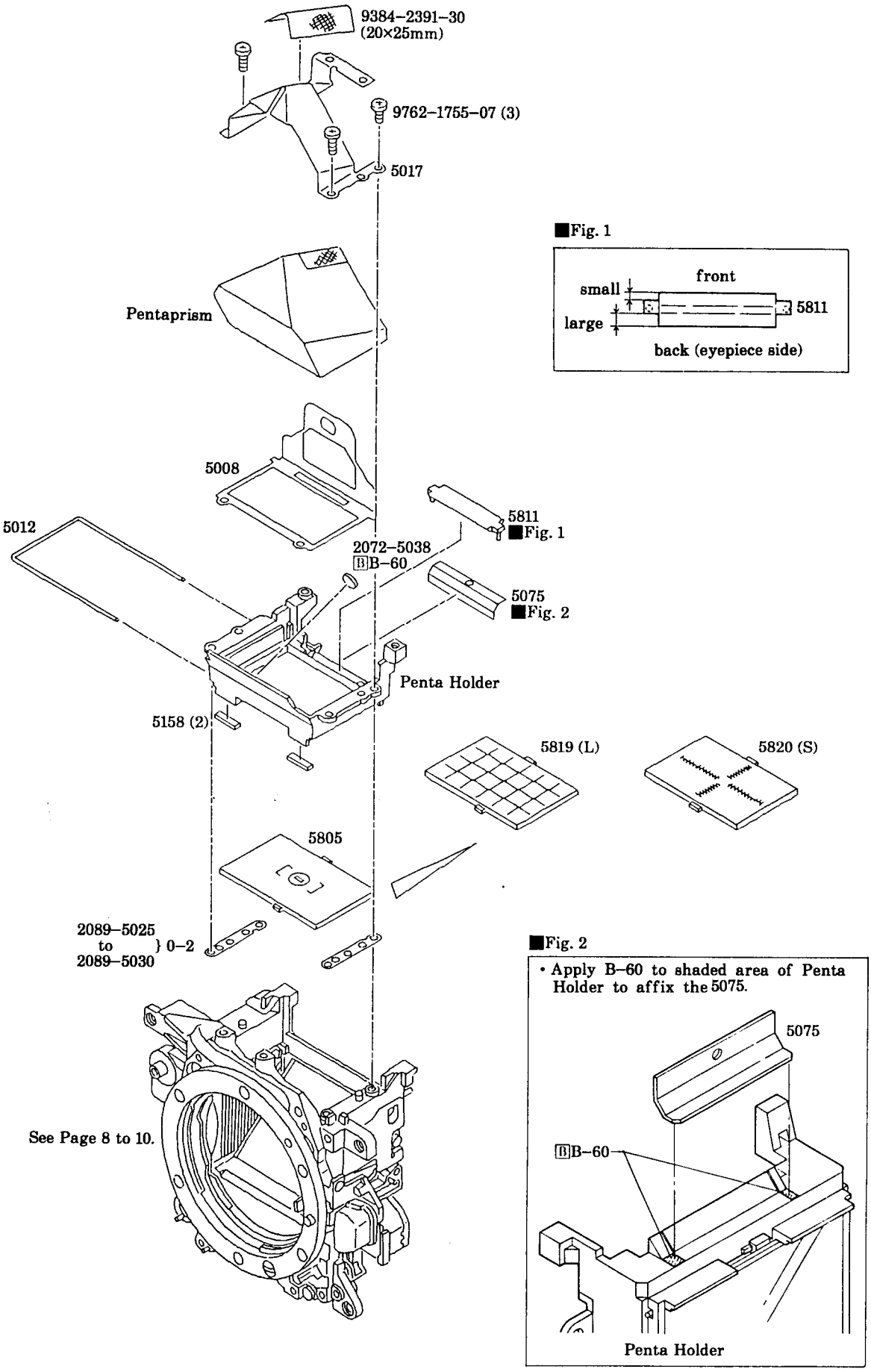

6 FPC–A Assy, FPC–K Assy, Shutter Assy Installation

■Install in the order of ① to ⑥.

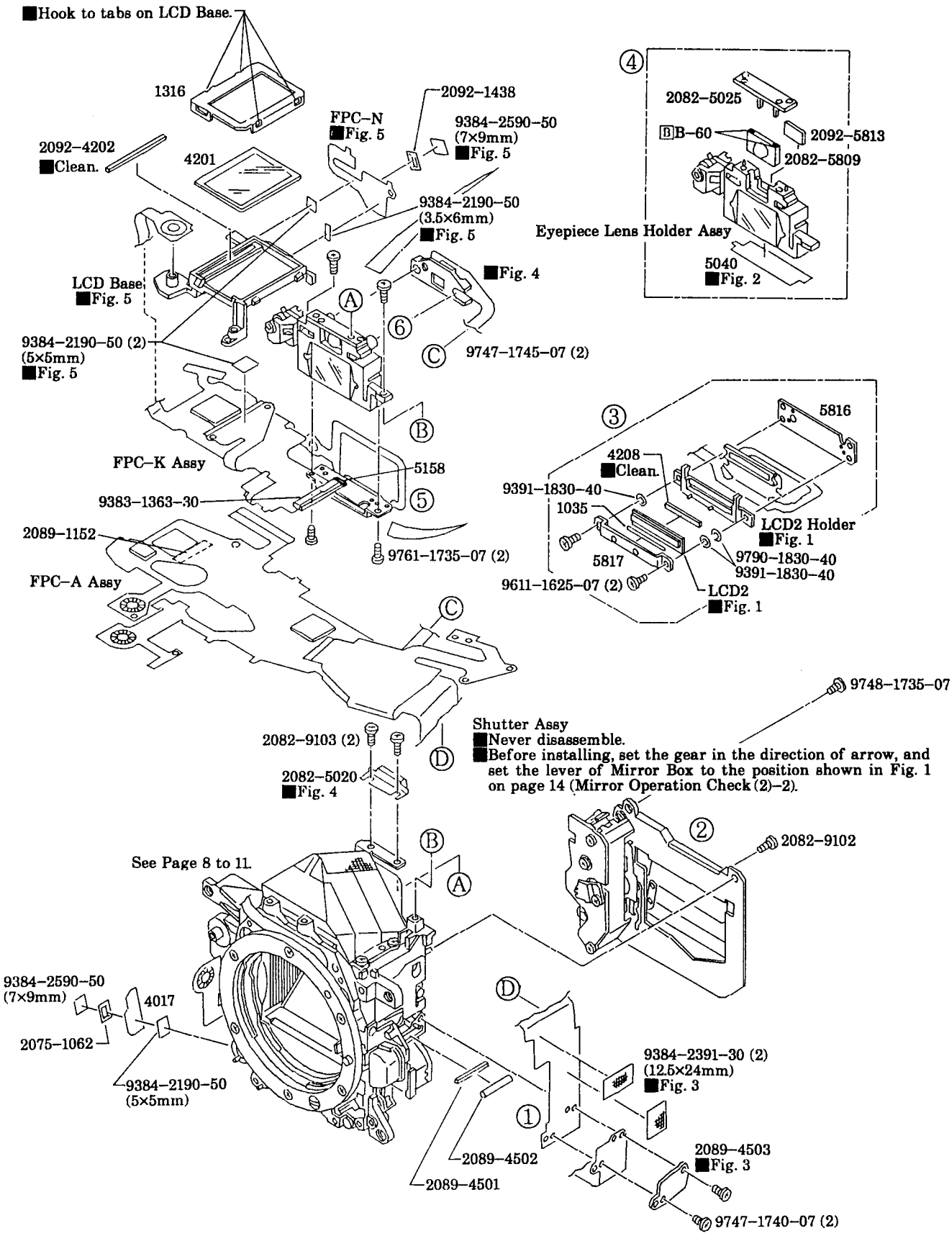

■Fig. 1

• Fit posts of LCD2 Holder to holes of FPC–K Assy.

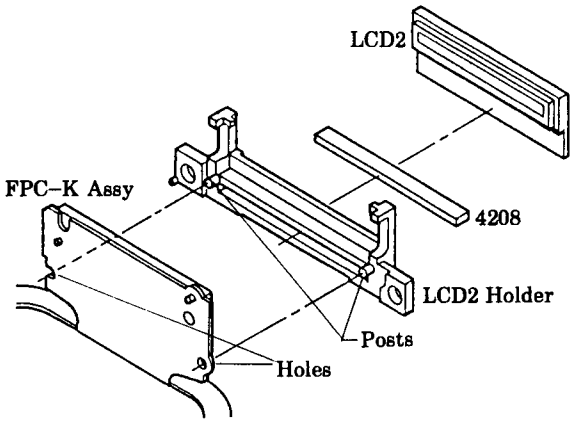

■Fig. 2

• Affix the 5040 to Eyepiece Lens Holder Assy.

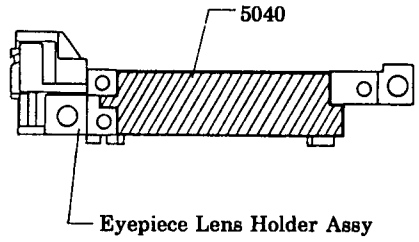

■Fig. 3

• Acetate Tape

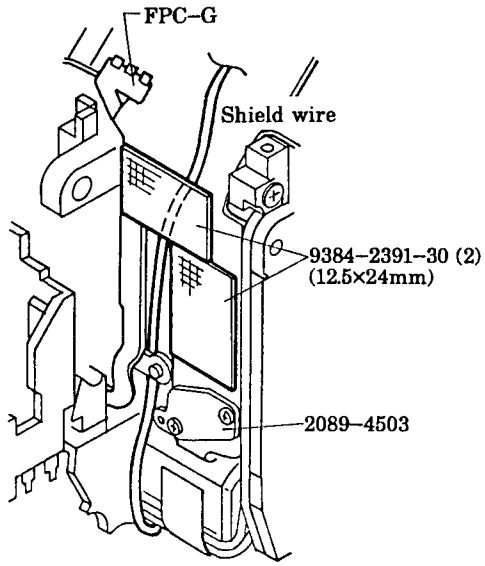

■Fig. 4

• Install FPC–A Assy's SPC before installing the 2082–5020.

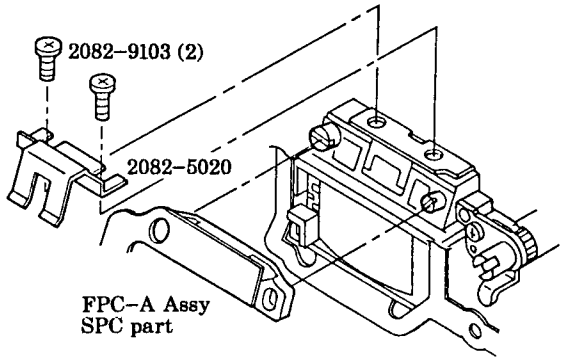

■Fig. 5

• Install FPC–K Assy to LCD Base as shown.

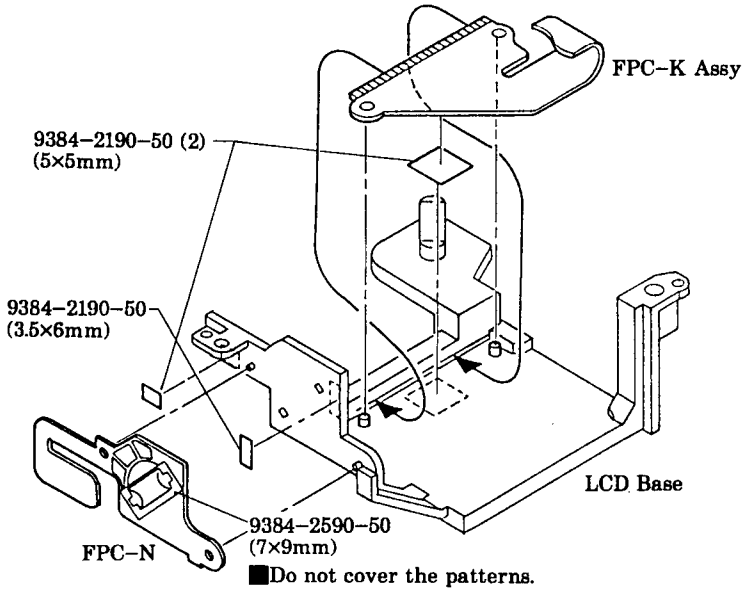

■Do not cover the patterns.

■Mirror Operation Check

(1)After Aperture Base Assy installation ("Mirror Box Assembly– I "; page 8, 9)

1. Press the "a" of SL–2 in arrow direction (Fig. 1). Mirror should go up.
2. Press the "b" of SL–2 in arrow direction (Fig. 1). Aperture–Transmitting–Gear should move and stop at the position as shown in Fig. 2.
3. Insert a jig #2082–2504–75 into the hole "c" (Fig. 2) and turn it clockwise until the Cam Gear makes one rotation and stops at the position in Fig. 3.
   The Mirror and Aperture–Transmitting–Gear should be reset.

(2)After Aperture Ring Set installation ("Mirror Box Assembly– II "; page 10)

1. Insert a jig #2082–2504–75 into the hole "c" (Fig. 2) and turn it clockwise until the Cam Gear makes one rotation and stops at the position in Fig. 3.
   The Mirror and Aperture–Transmitting–Gear should be reset.
2. Press the "a" of SL–2 in arrow direction (Fig. 1). Mirror should go up.
3. Press the "b" of SL–2 in arrow direction (Fig. 1). Aperture Ring Set should be set to the minimum stop down position.
4. Repeat (2)–1.

(3)After Shutter Assy Installation (page 12, 13)

1. Press Aperture Stop Lever in arrow direction (Fig. 1). Aperture Ring should be set to the minimum stop down position.
2. Press the "a" of SL–2 in arrow direction (Fig. 1). Mirror should go up and shutter curtains should run.
3. Insert a jig #2082–2504–75 into the hole "c" (Fig. 2) and turn it clockwise until the Cam Gear makes one rotation and stops at the position in Fig. 3.
   The Mirror, Aperture Ring, and Shutter should be reset.

■Fig. 1

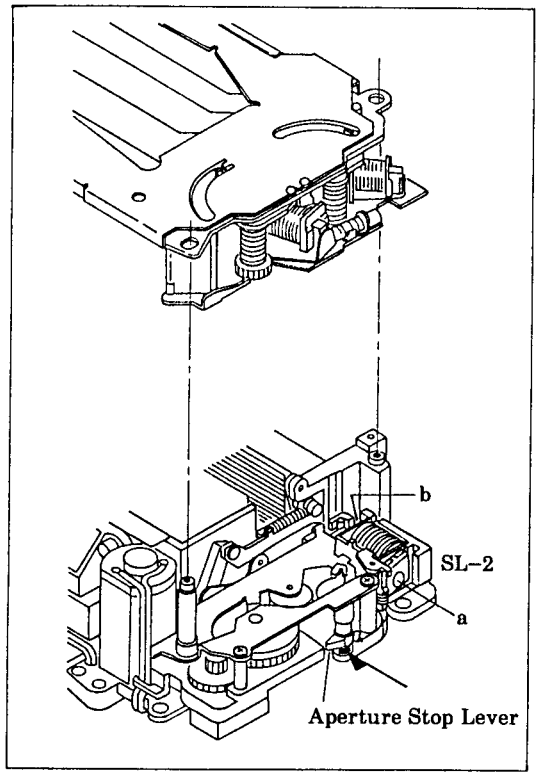

■Fig. 2

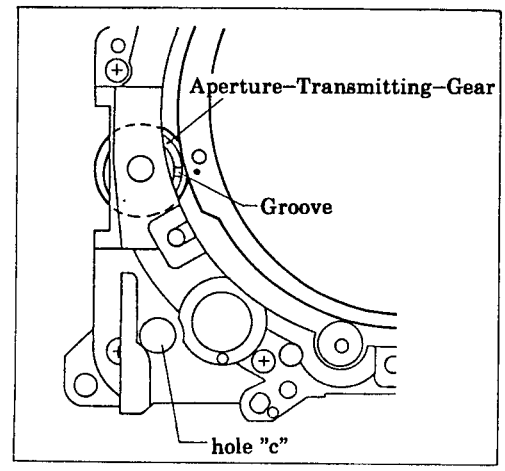

■Fig. 3

• Gear engaged: Cam Gear stops at the position shown.

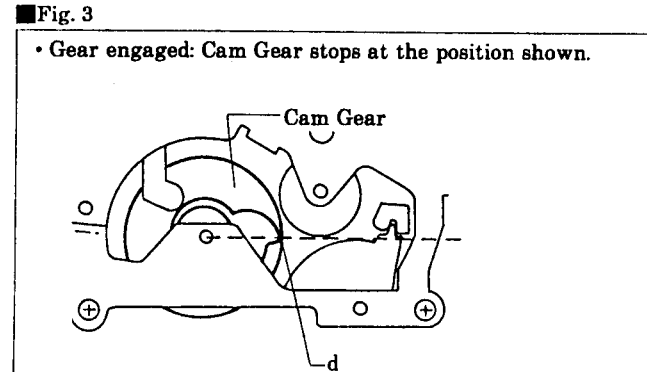

7 Flash Converter PCB Assy, Mirror Box Assy Installation

■Install in the order of ① to ⑥.

■Arrange wires referring to Fig. 3, 4 and 9.

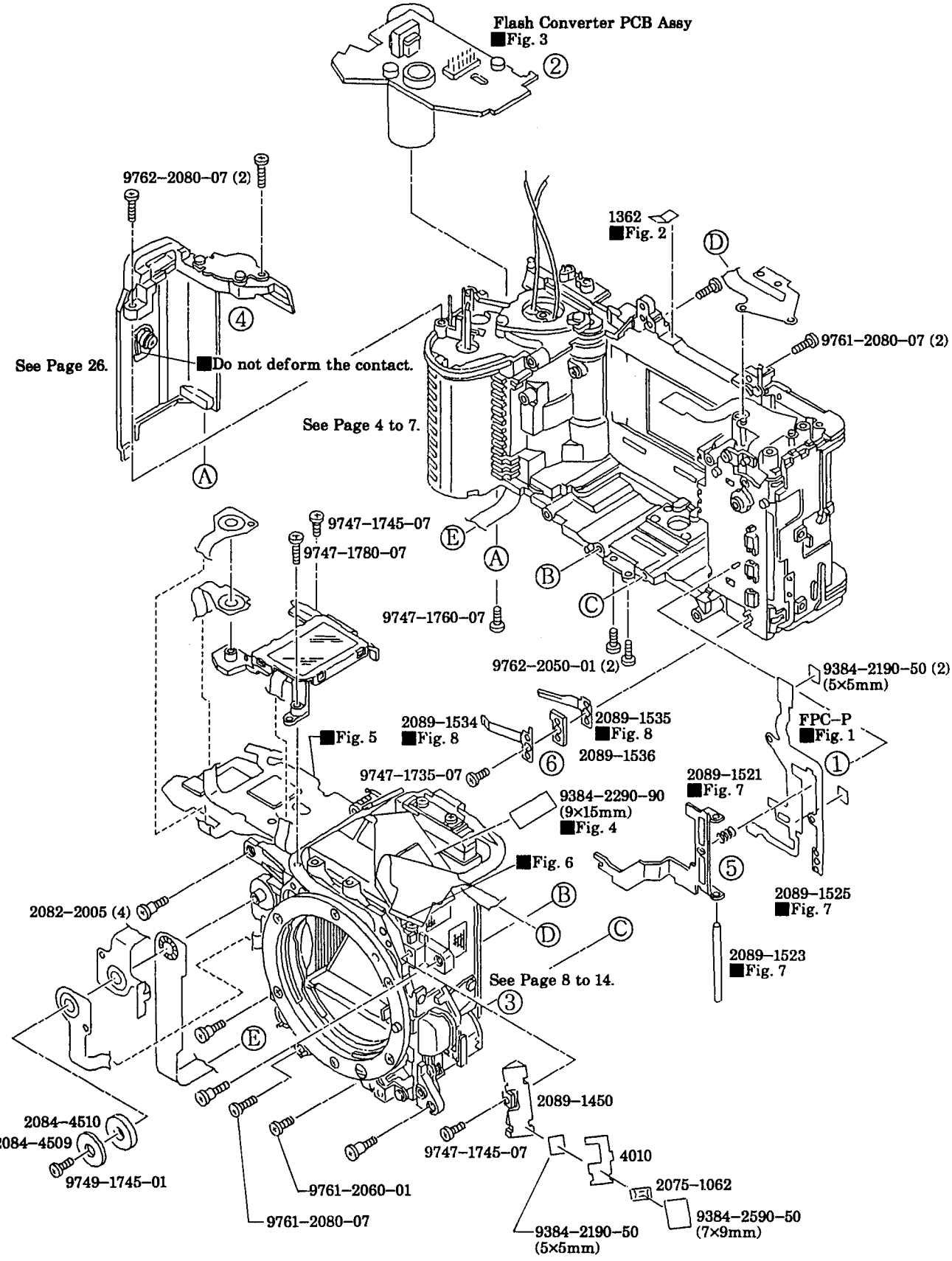

■Fig. 1

• Install FPC–P fitting the holes to the posts on DX Contact Base Assy.

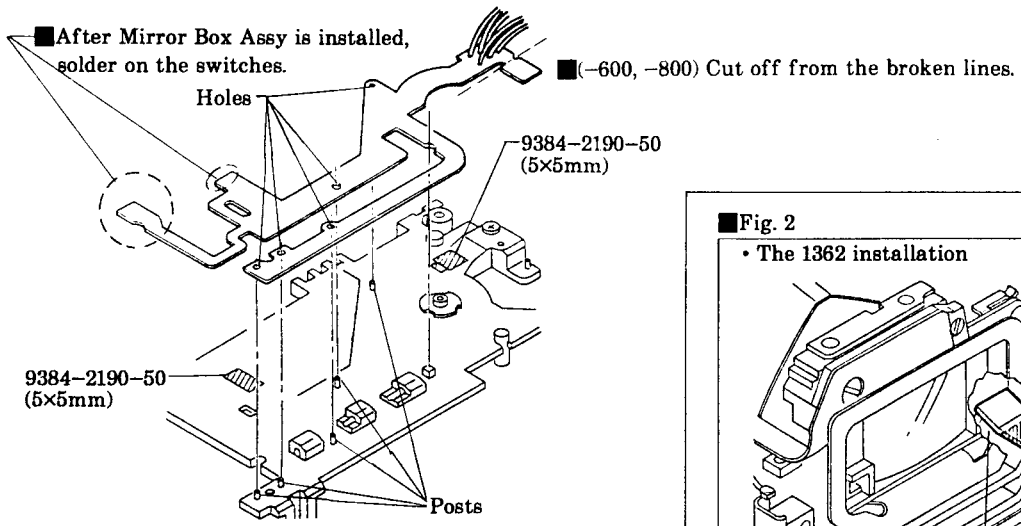

■Fig. 2

• The 1362 installation

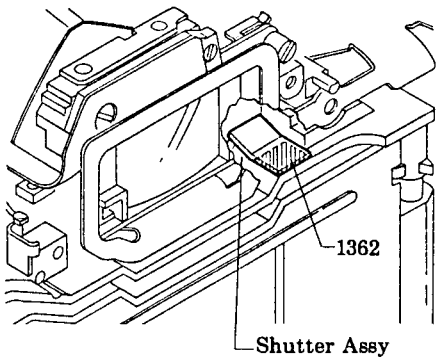

■Fig. 3

• Wire arrangement

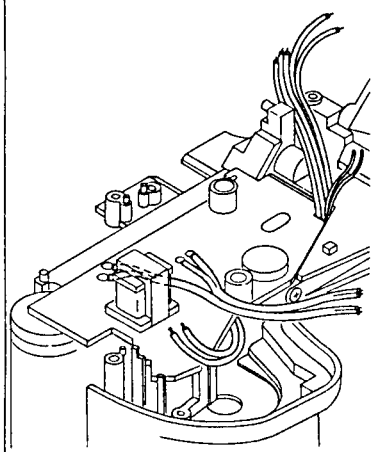

■Fig. 4

• Wire arrangement

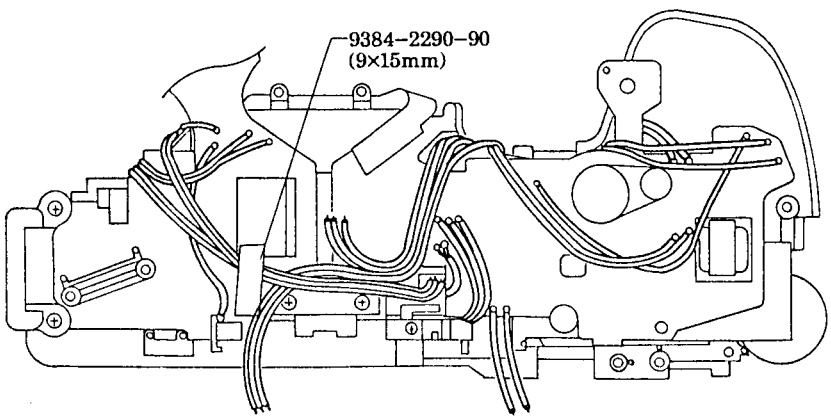

■Fig. 5

• Insert the contact of FPC–A Assy to body as shown.

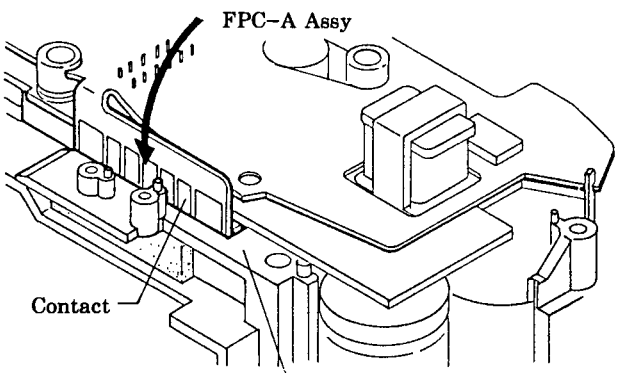

■Fig. 6

• Insert the FPC–A to the end of connector (CN–101), then push both sides of the connector in arrow direction until it fits.

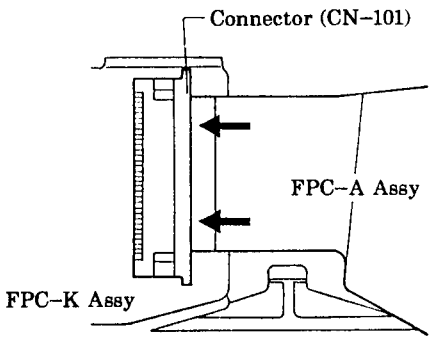

■Fig. 7

• Install in the order of ① to ③.

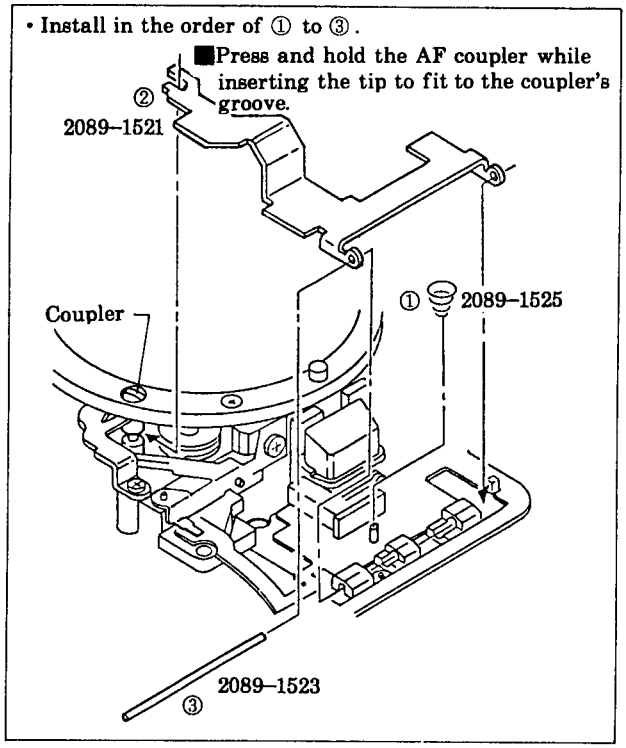

■Fig. 8

• Set the tip of the 2089–1535 underneath DX Contact Base Assy.

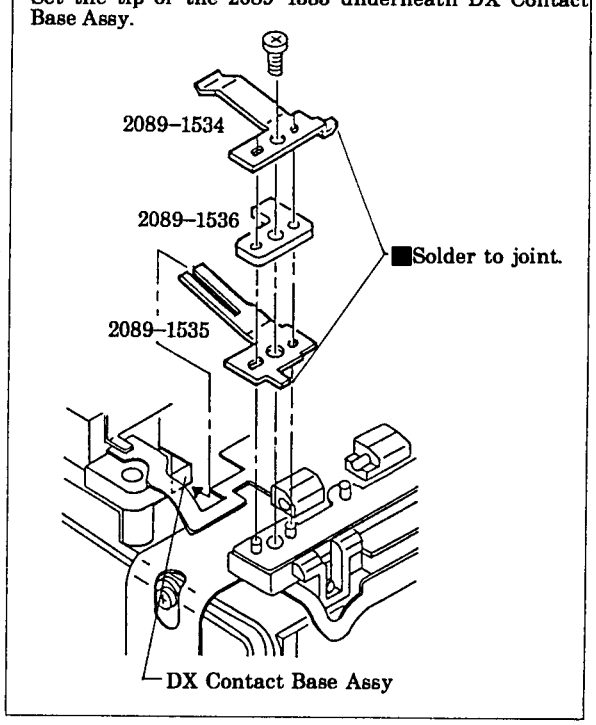

■Fig. 9

• Wire arrangement

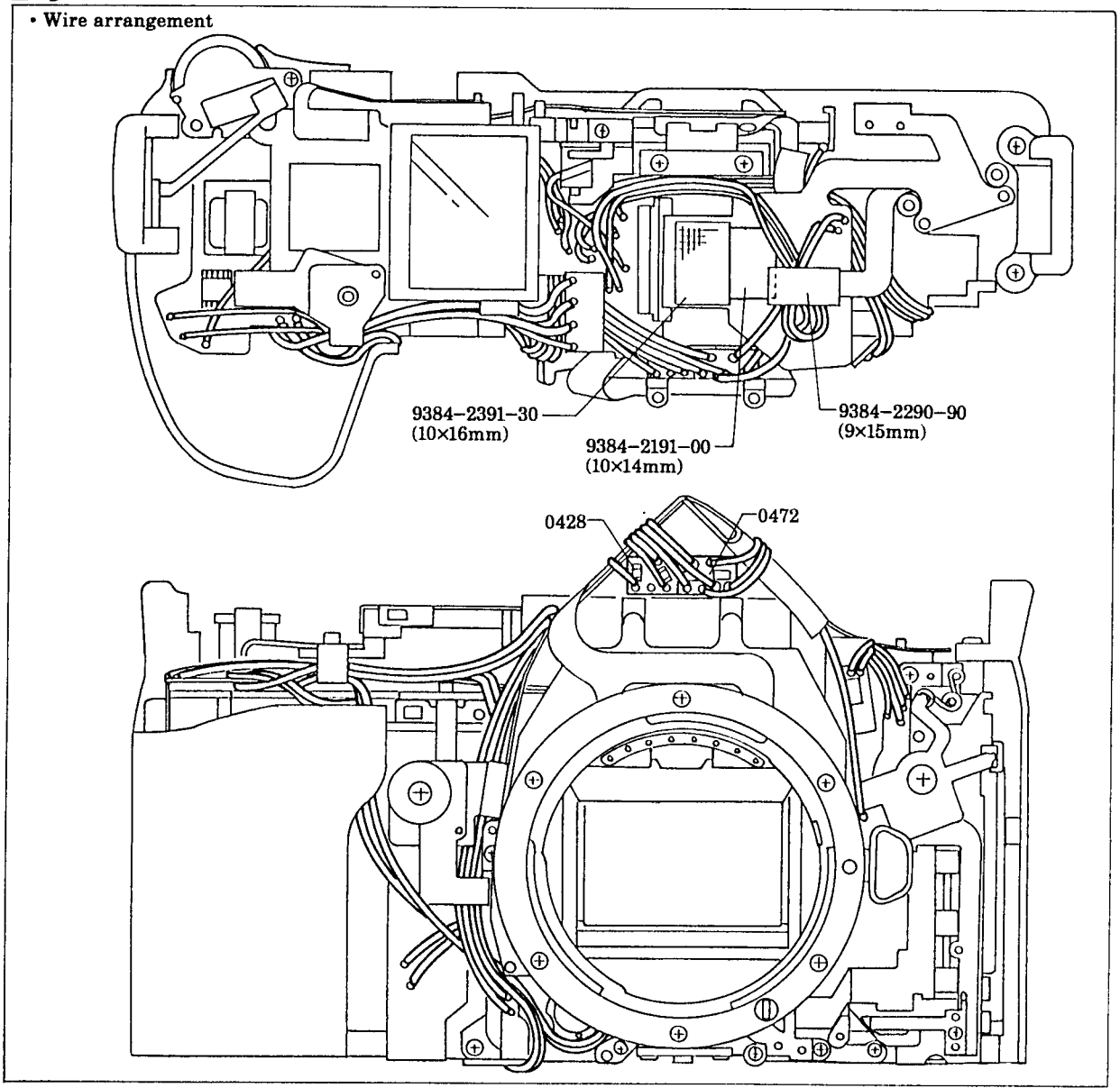

8 External Parts Installation

- Install in the order of ① to ⑧.
- Before disassembly, be sure to discharge the condenser referring to page 2.
- Before installing Top Cover Assy, perform Manual Set SS Adjustment (page 32), AE Adjsutment (page 36), and SPC Position Adjsutment (page 37).
- Before installing Top Cover Assy, be sure to unsolder the main Sw. pattern or cut the pattern in FPC-K referring to page 2.

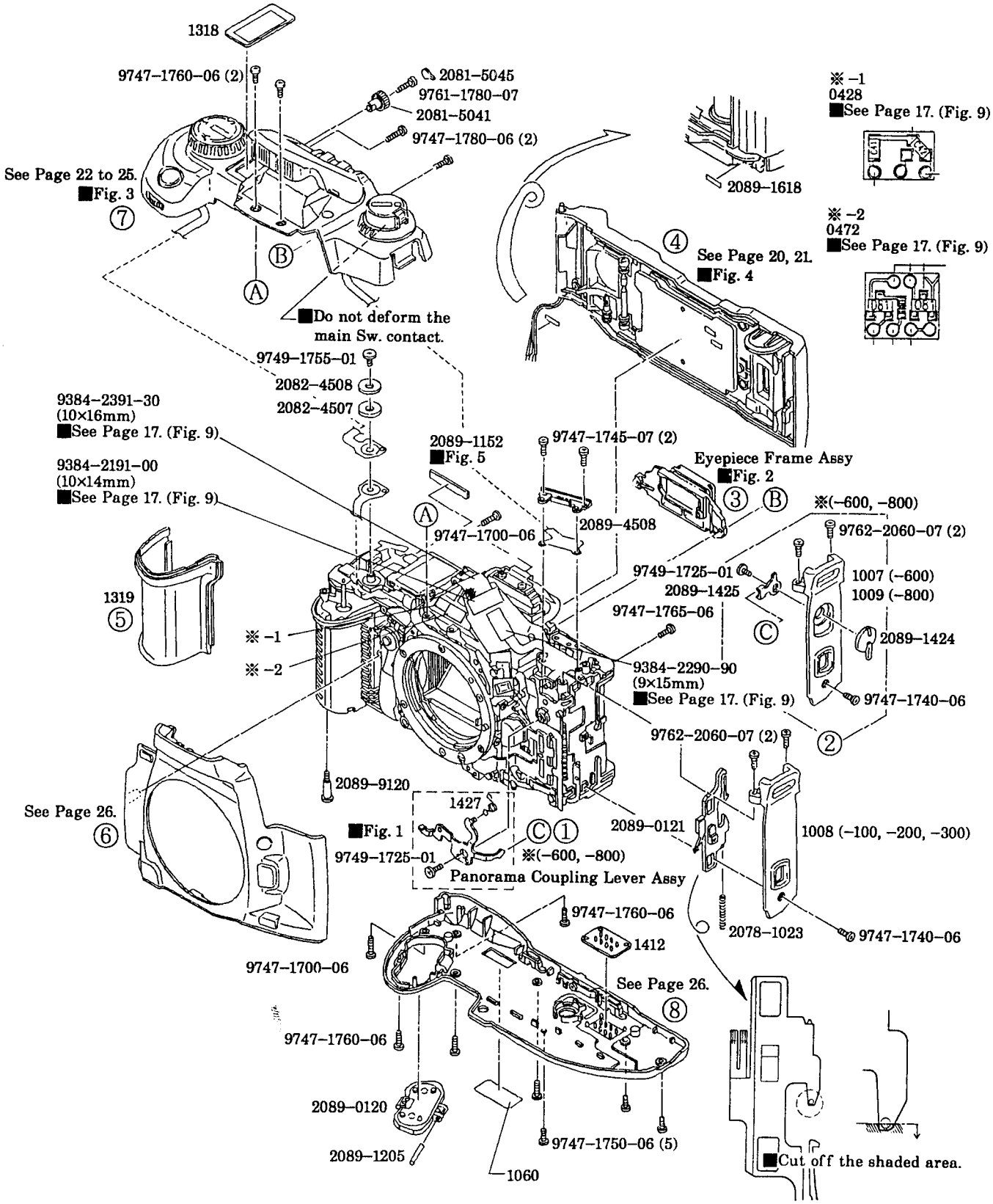

■Fig. 1

• Install Panorama Coupling Lever Assy so that the 0277 and 0170 come to the position as below. Install the 1427 as shown.

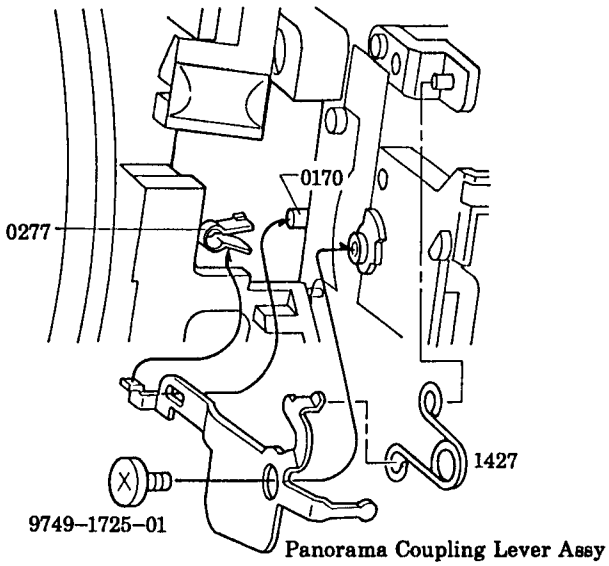

■Fig. 2

• Hook the Eyepiece Frame Assy to Ground Plate and LCD Base.

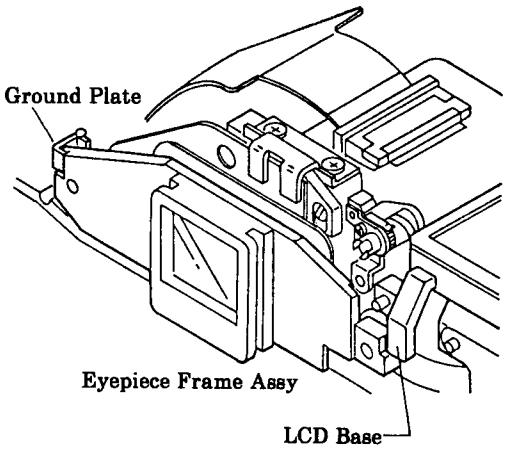

■Fig. 3

• FPC–H and FPC–I installation

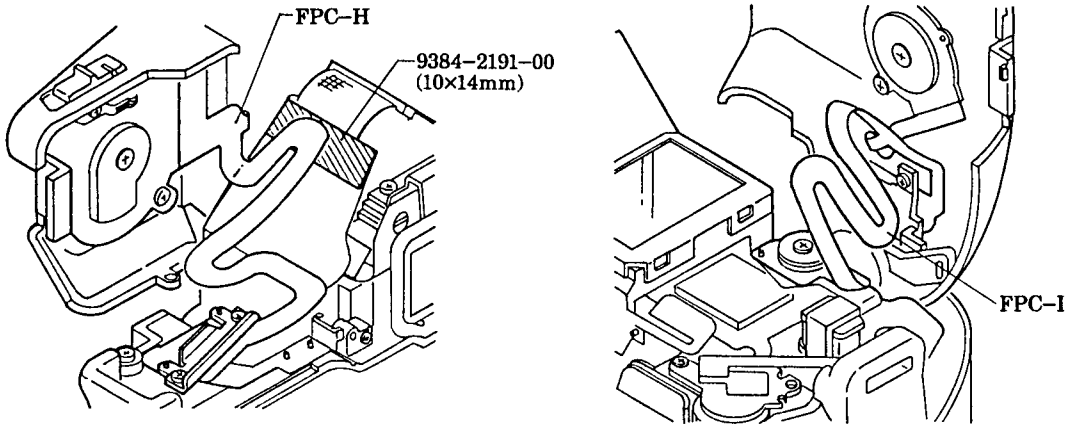

■Fig. 4

• Wire arrangement

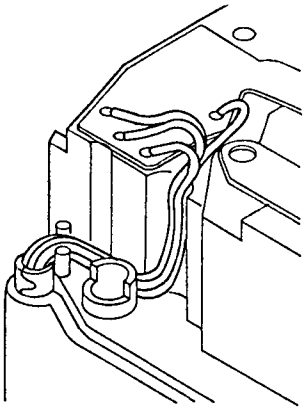

■Fig. 5

• The 2089–1152 installation

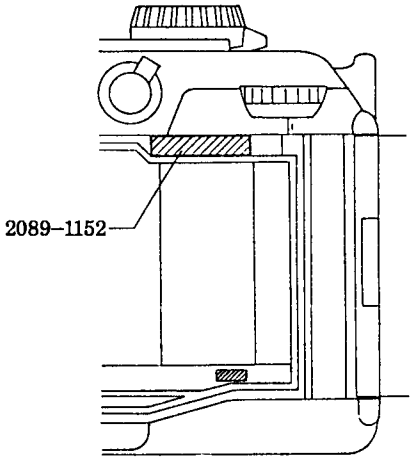

■Back Cover Assy Installation (–100, –300)

NON DATE MODEL (–100, –300)

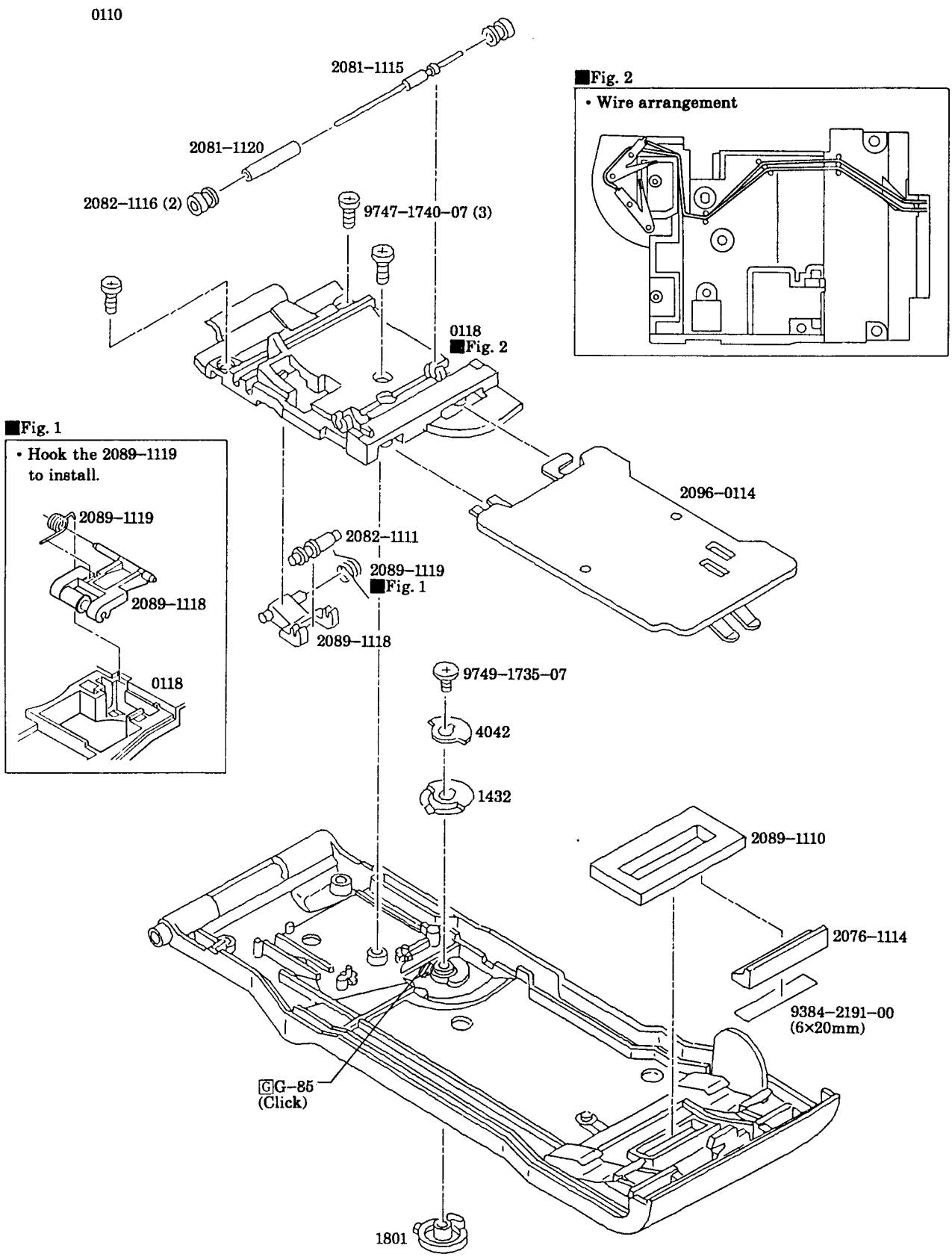

■Back Cover Assy Installation (–200, –600, –800)

DATE MODEL (–200, –600, –800)

2096–0114
2089–1166
Not available as a service part
2419–1292 (–200)
2094–4261 (–600, –800)
2081–1115
2081–1120
2082–1116 (2)
9747–1735–06 (5)
9384–2190–50 (2.5×14mm)
9747–1745–06 (2)
0124
■Fig. 2
2082–1111
2089–1119
■Fig. 1
2089–1118
9749–1735–07
4042
1432
2089–1110
0485–1210
0109
■Clean with IPA.
2076–1114
9384–2191–00 (6×20mm)
G G–85 (Click)
1801

■Fig. 1

• Hook the 2089–1119 to install.

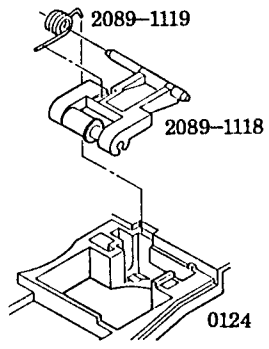

■Fig. 2

• Wire arrangement

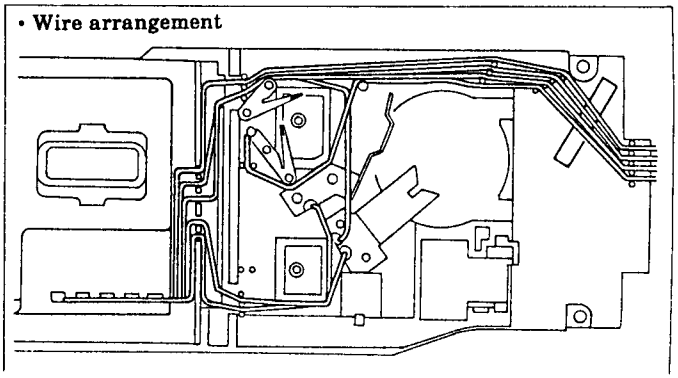

■Top Cover Assy Assembly– I

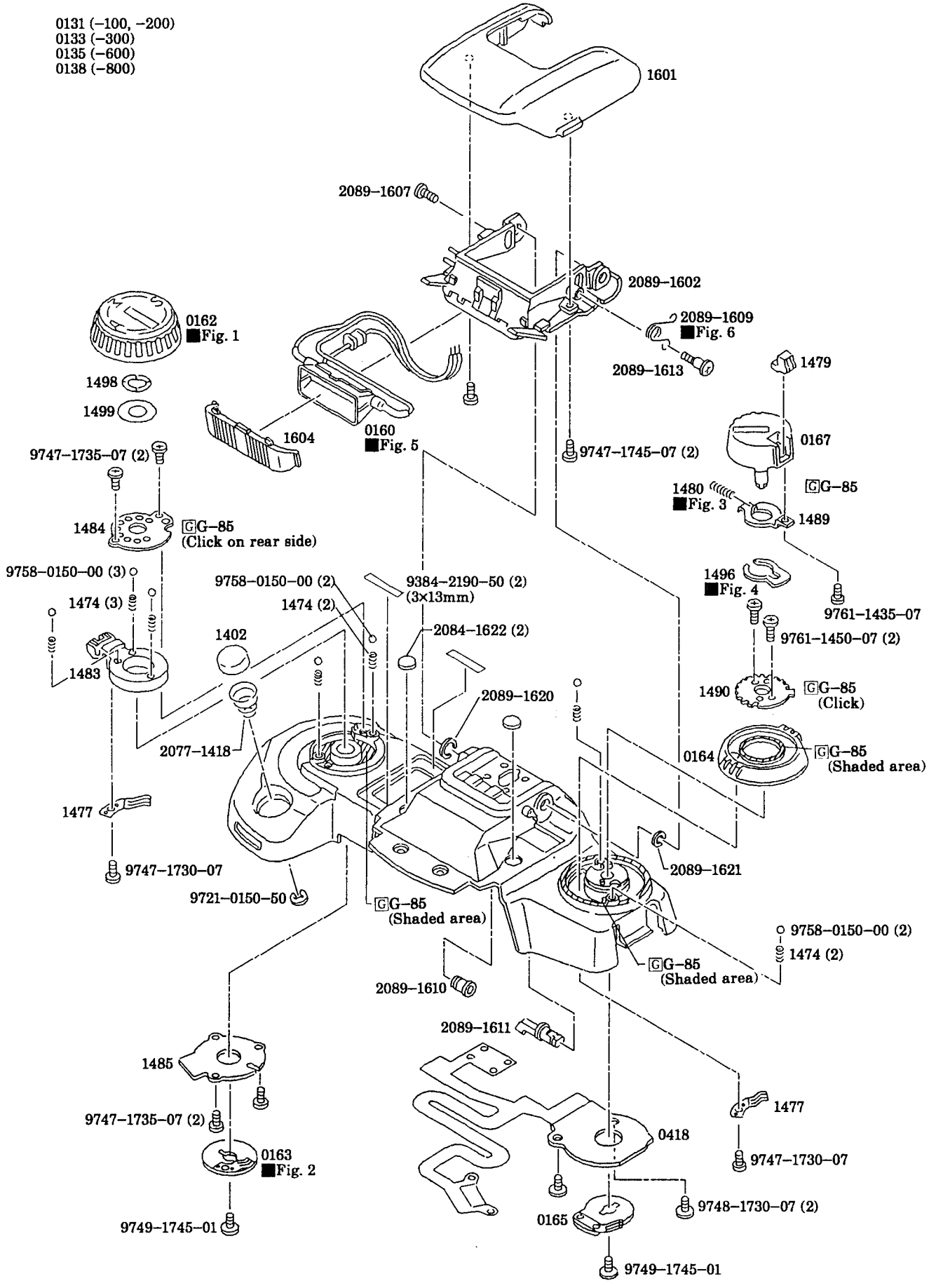

■Fig. 1

• Apply G–85 to the shaded area of 0162.

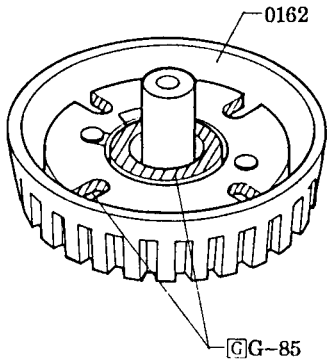

■Fig. 2

• Install the 0163 so that the punch mark of the 0162 and caulkings of the 0163 are in position.

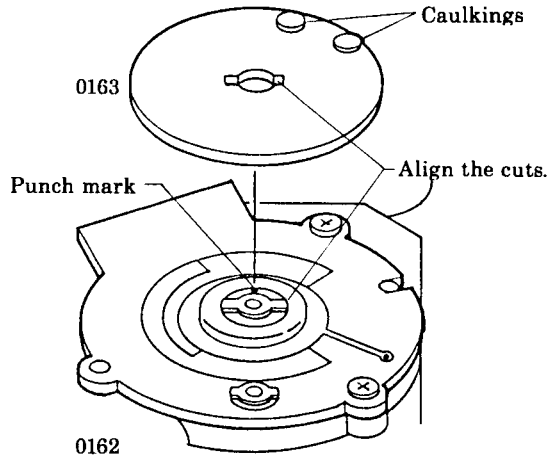

■Fig. 3

• Install the 1480 so that it stops at the tab "a".
• Apply G–85 to the shaded area.

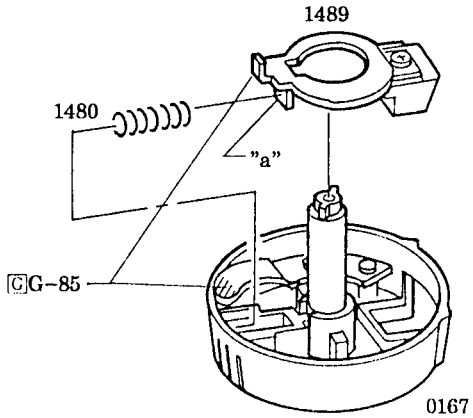

■Fig. 4

• The 1496 installation

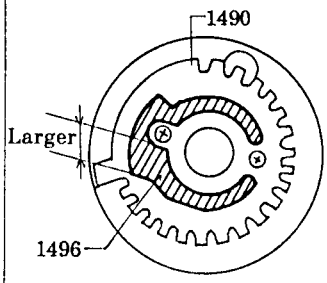

■Fig. 5

• Wire arrangement

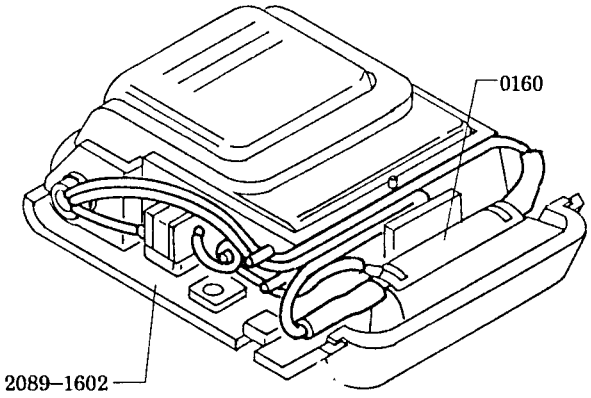

■Fig. 6

• The 2089–1609 installation

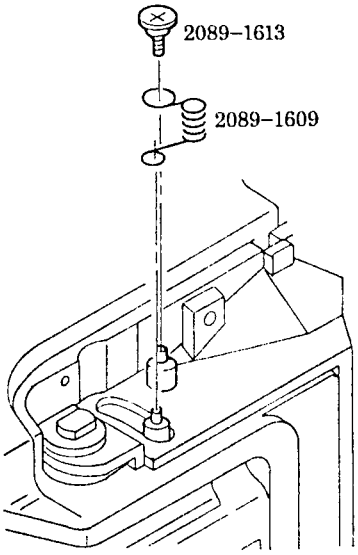

■Top Cover Assy Assembly– II

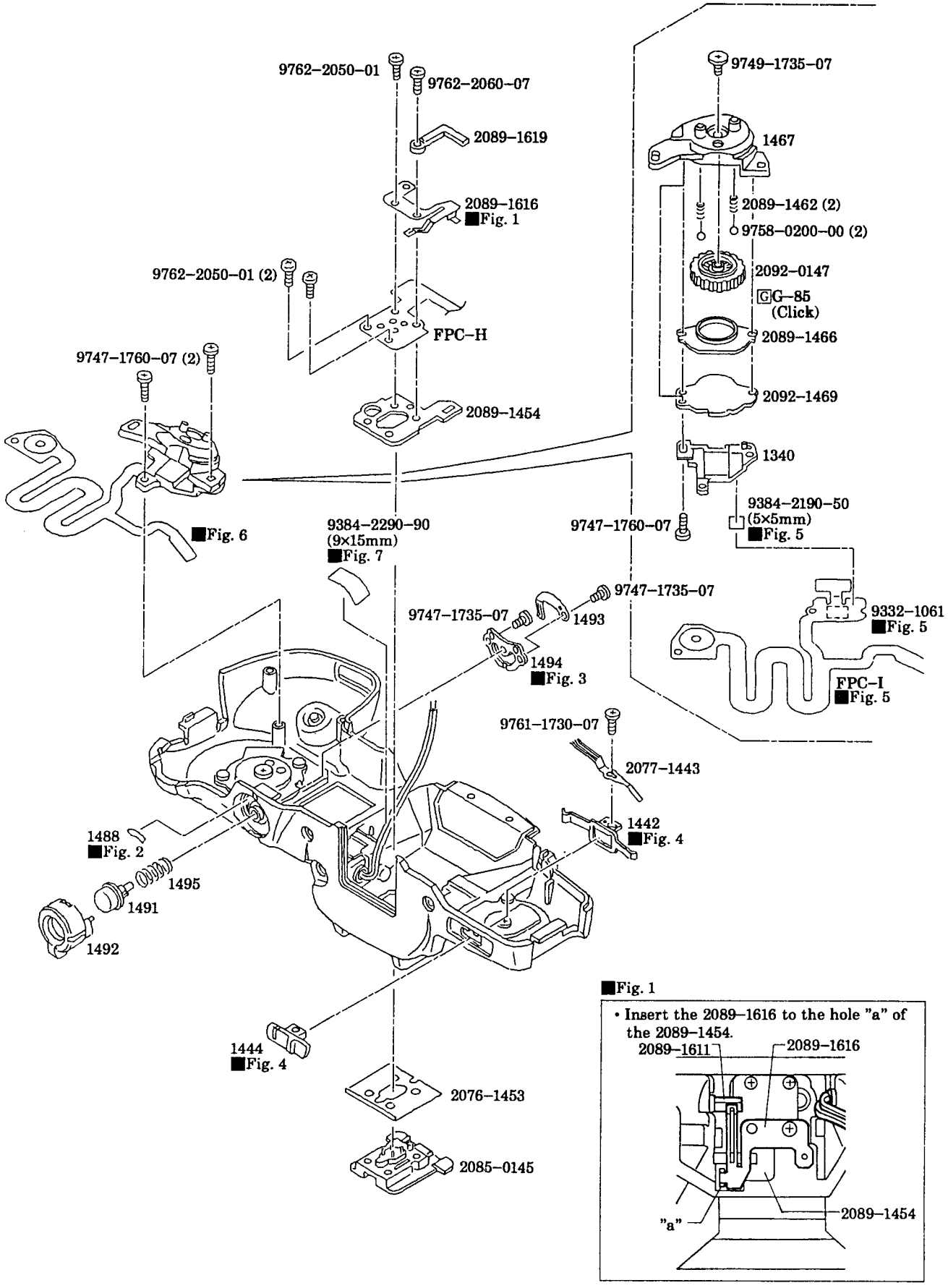

■Fig. 2

• The 1488 installation

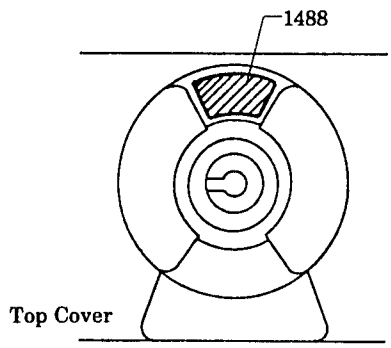

■Fig. 3

• Apply G–85 to shaded area.

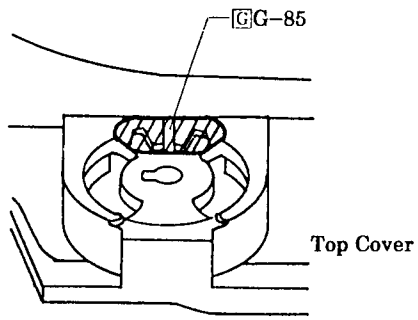

■Fig. 4

• Apply G–85 to shaded area.
• Install the 1442 before the 1444.

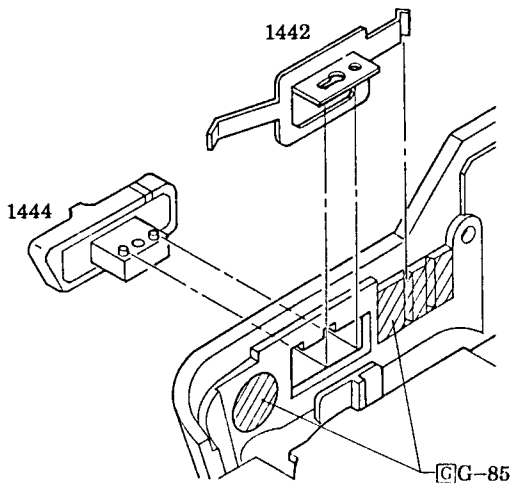

■Fig. 5

• Install FPC–I fitting to posts on the 1340.

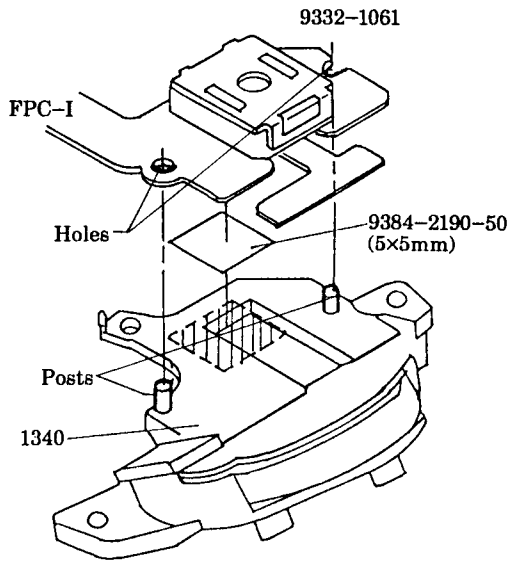

■Fig. 6

• Solder FPC–I to the 1485.

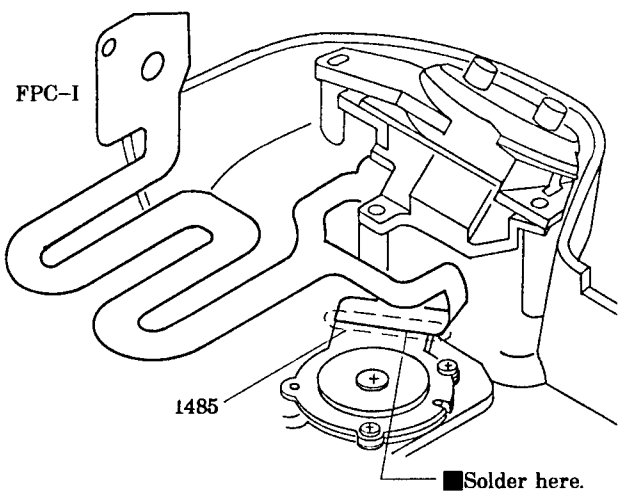

■Fig. 7

• Wire arrangement

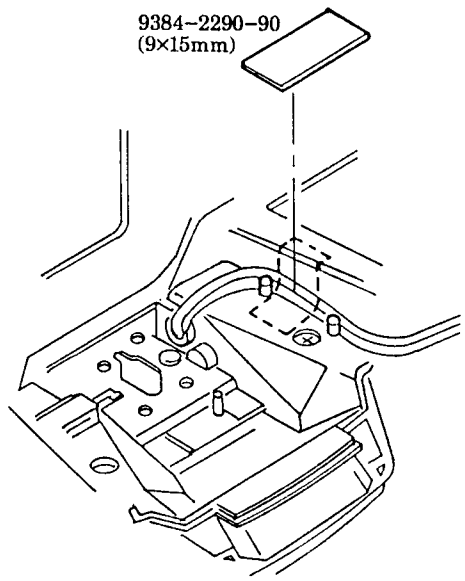

■Front Cover Assy, Strap Eyelet (R), Bottom Cover Assembly

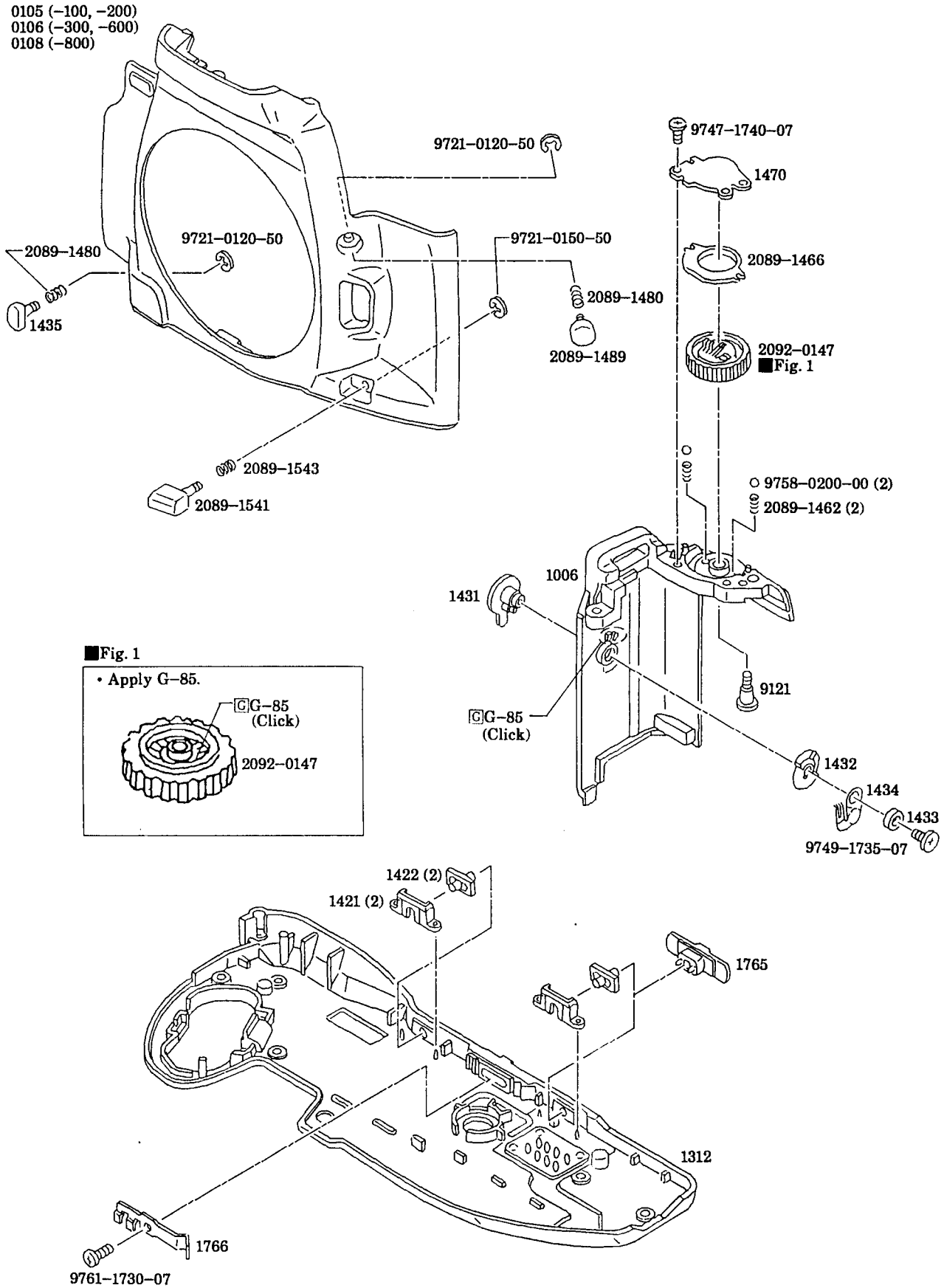

2097 Trouble–Shooting Chart (Appendix)

■Only an appendix part of this section is included here. Refer to the 2089's trouble–shooting chart and the causefinding chart because they are almost the same as the 2097.

Contents

■Name of switches ..... P. 2
■Table of switches ..... P. 3
■SW. CHECK ..... P. 4, 5
■HELP CODE ..... P. 6
■Circuit diagram (FPC–A) ..... P. 7
■Circuit diagram (Flash Converter PCB) ..... P. 8
■Table of electrical elements (FPC–A Assy, FPC–K Assy) ..... P. 9
■Map of electrical elements (FPC–A Assy; electrical–elements mounting side) ..... P. 10
■Map of electrical elements (FPC–A Assy) ..... P. 11
■Map of electrical elements (FPC–K Assy; electrical–elements mounting side) ..... P. 12
■Map of electrical elements (FPC–K Assy) ..... P. 13
■Map of electrical elements (Flash Converter PCB Assy) ..... P. 14
■Map of electrical elements (FPC–D Assy) ..... P. 15
■Map of electrical elements (FPC–M Assy) ..... P. 16
■Map of electrical elements (FPC–F) ..... P. 17
■Map of electrical elements (FPC–I) ..... P. 18
■Map of electrical elements (FPC–H) ..... P. 19

■Name of switches

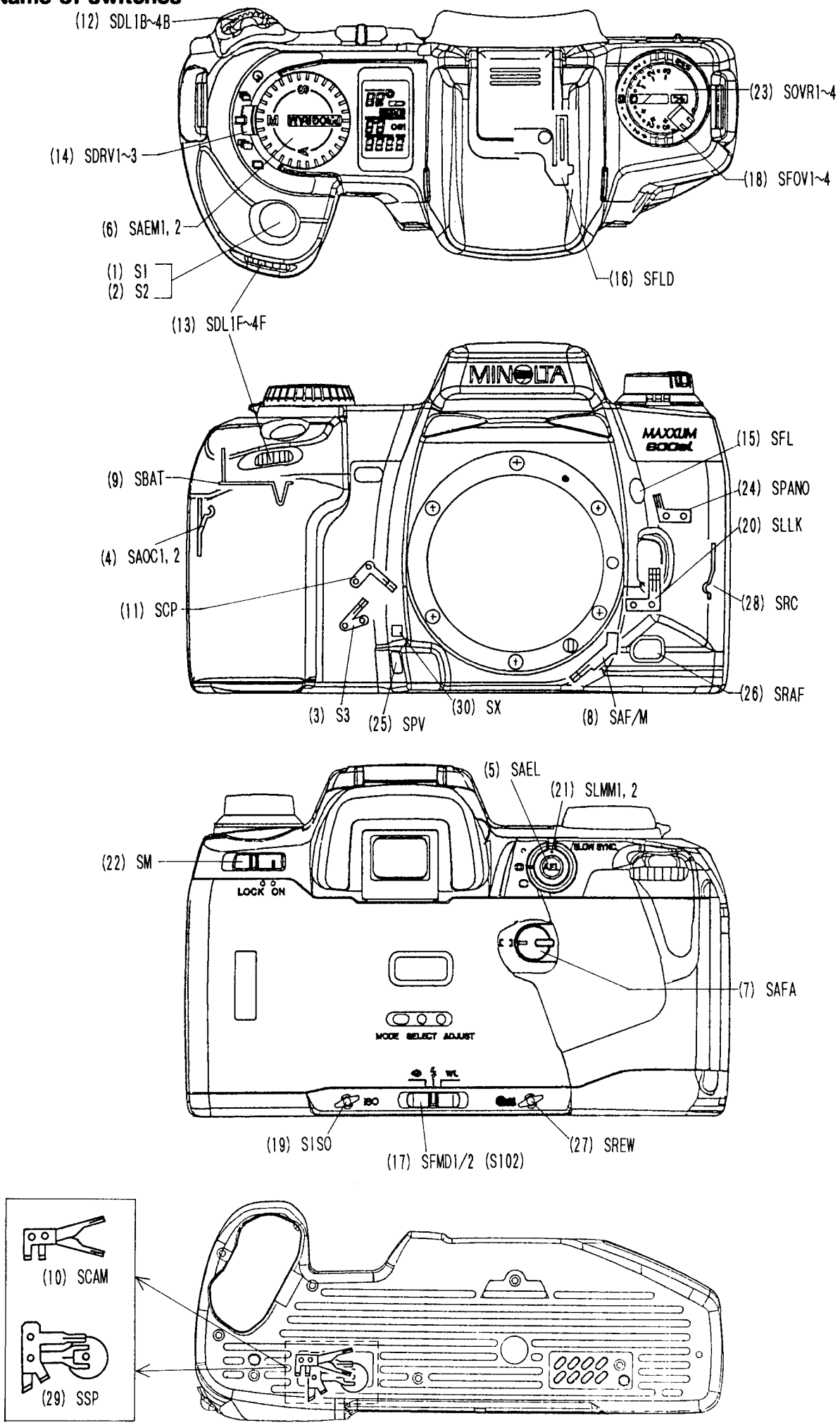

Table of switches

	Symbol	Description	Function	Operation
1	S1	Metering Sw.	Starts metering, focusing, and indication in the data panels.	ON by pressing Shutter-Release Button partway down
2	S2	Shutter release Sw.	Releases the shutter (after focus is confirmed in AF mode).	ON by pressing Shutter-Release Button all the way down
3	S3	Mechanical-charge completion Sw.	Detects aperture, mirror and shutter charge completion.	ON when aperture, mirror and shutter are all charged.
4	SAOC1, 2	AF mode Sw.	Selects an AF mode. (continuous/auto/single)	ON, OFF combination of 2 switches according to AF Mode Selector
5	SAEL	AE lock Sw.	Stores the metered value in memory.	ON by pressing AE-Lock Button
6	SAEM1, 2	Exposure mode Sw.	Selects an exposure mode. (P/A/S/M)	ON, OFF combination of 2 switches according to Exposure-Mode Dial
7	SAFA	AF area Sw.	Selects an AF area (wide/spot)	ON: spot area, OFF: wide area
8	SAF/M	AF/M detection Sw.	Detects AF coupler status and focus mode	ON: manual focus, OFF: auto focus
9	SBAT	Battery Sw.	Resets IC1.	OFF during a battery installed
10	SCAM	Film transport Sw.	Detects film advance/rewind status.	ON: film advance, OFF: film rewind
11	SCP	Charge-position detection Sw.	Detects aperture and mirror charge completion.	ON momentarily when aperture and mirror are charged.
12	SDL1B, 2B 3B, 4B	Rear control dial Sw	Selects settings.	ON, OFF combination of 4 switches according to Rear Control Dial
13	SDL1F, 2F 3F, 4F	Front control dial Sw.	Selects settings.	ON, OFF combination of 4 switches according to Front Control Dial
14	SDRV1, 2, 3	Drive mode Sw.	Selects a drive mode (single/continuous/ self-timer/multiple/bracketing)	ON, OFF combination of 3 switches according to Drive-Mode Selector
15	SFL	Fill-flash Sw.	Forces flash to fire.	ON by pressing Flash Control Button
16	SFLD	Flash down Sw.	Detects bulit-in flash status.	ON during built-in flash is down.
17	SFMD1/2 (S102)	Flash mode Sw.	Selects a flash mode. (red-eye-reduction/normal/wireless-flash)	3 terminals changeover according to Flash-Mode Selector
18	SFOV1, 2, 3, 4	Flash compensation Sw.	Selects amount of flash compensation.	ON, OFF combination of 4 switches according to Flash-Compensation Dial
19	SISO	ISO Sw.	Allows film-speed setting.	ON by pressing Film-Speed Button (Set by control dials)
20	SLLK	Lens release Sw.	Detects lens existence.	OFF during a lens attached
21	SLMM1, 2	Metering mode Sw.	Selects a metering mode. (honeycomb/centerweighted/spot)	ON, OFF combination of 2 switches according to Metering-Mode Selector
22	SM	Main Sw.	Activates and deactivates the camera.	ON by sliding Main Switch to ON
23	SOVR1, 2, 3, 4	Exposure compensation Sw.	Selects amount of exposure compensation.	ON, OFF combination of 4 switches according to Exposure-Compensation Dial
24	SPANO(*)	Panorama Sw.	Selects normal/panorama format.	ON: normal, OFF: panorama
25	SPV	Preview Sw.	Sets aperture for depth-of-field preview	ON by pressing Depth-Of-Field Preview Button
26	SRAF	Focus mode Sw.	Selects a focus mode. (AF/M)	ON by pressing AF/M Focus Mode Button
27	SREW	Rewind Sw.	Starts mid-roll rewind.	ON by pressing Rewind Button
28	SRC	Back-cover Sw.	Detects back-cover status, and starts/cancels initial loading.	OFF by closing the back cover
29	SSP	Sprocket Sw.	Counts amount of film advance/rewind.	Repeats ON/OFF by sprocked rotation
30	SX	Flash sync. Sw.	Triggers flash.	ON at 1c traverse completion, OFF at film advance start

*Only for panorama model (-600, -800)

■SW. CHECK

■Status of each switch (on/off, dial settings) can be read out using HIT system.
See page 28 of Repair Guide for details of HIT system set-up.

■Fig. 1

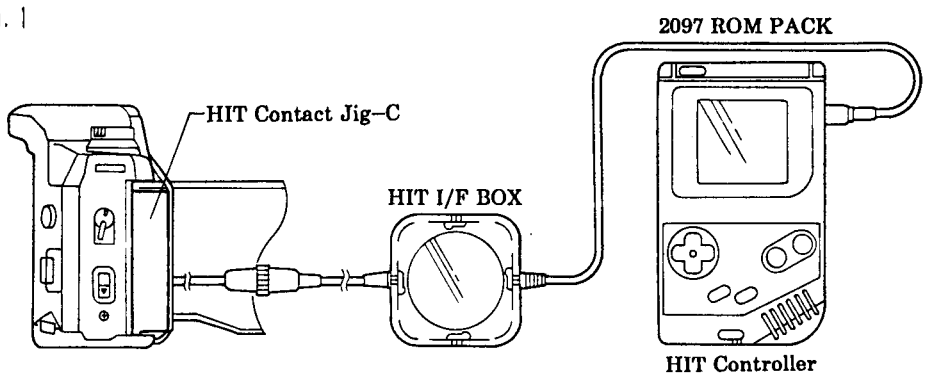

■Check

1. Set the equipments and camera as in Fig. 1.
2. Select "ASSIST MODE" using Control Pad and press SELECT Button.
3. Select "SW. CHECK 1" or "SW. CHECK 2" using Control Pad and press SELECT Button.
4. Press Shutter-Release Button partway down. Status of switches appear as in Fig. 2 or Fig. 3.
5. Press SELECT Button. Displays are replaced with the assist mode menu.

■Fig. 2: SW. CHECK 1 display

```
SW. CHECK 1

SX  SCP  S3  SSP  SCAM
S1  S2  SAEL  SISO  SM
SREW  SRC
SAFM  SLLK  SFL  SFLD
SRAF  SPV  SAFA

MENU
```

■Fig. 3: SW. CHECK 2 display

```
SW. CHECK 2

SOVR  1  2  3  4
SFOV  1  2  3  4
SDRV  1  2  3
SAEM  1  2
SFMD  1  2
SLMM  1  2
SAOC  1  2
MENU
```

*Swtiches appear in black box ⇒ ON

■Camera setting (SW. CHECK2)
Camera settings according to each switch status are as follows.

①SOVR (Exposure compensation Sw.)

	−3.0	2.5	2.0	1.5	1.0	0.5	±0	0.5	1.0	1.5	2.0	2.5	+3.0
SOVR1	ON	OFF	OFF	OFF	OFF	ON	ON	OFF	OFF	ON	ON	OFF	OFF
SOVR2	OFF	OFF	ON	ON	OFF	OFF	OFF	OFF	ON	ON	ON	ON	OFF
SOVR3	ON	ON	ON	ON	ON	ON	OFF	OFF	OFF	OFF	OFF	OFF	OFF
SOVR4	OFF	OFF	OFF	ON	ON	ON	ON	ON	ON	ON	OFF	OFF	OFF

②SFOV (Flash compensation Sw.)

	−2.0	1.5	1.0	0.5	±0	0.5	1.0	1.5	+2.0
SFOV1	ON	ON	ON	OFF	OFF	OFF	OFF	OFF	OFF
SFOV2	ON	OFF	OFF	OFF	OFF	OFF	ON	ON	OFF
SFOV3	OFF	OFF	ON	ON	ON	OFF	OFF	OFF	OFF
SFOV4	OFF	OFF	OFF	OFF	ON	ON	ON	OFF	OFF

③SDRV (Drive mode Sw.)

	Multiple/	Bracket/	Single/	Continuous/	Self-timer
SDRV1	OFF	OFF	OFF	ON	ON
SDRV2	ON	ON	OFF	OFF	OFF
SDRV3	OFF	ON	ON	ON	OFF

④SAEM (Exposure mode Sw.)

	P	A	M	S
SAEM1	OFF	ON	ON	OFF
SAEM2	OFF	OFF	ON	ON

⑤SFMD (Flash mode Sw.)

	Red-eye/	Flash ON/	Wireless
SFMD1	OFF	OFF	ON
SFMD2	OFF	ON	ON

⑥SLMM (Metering mode Sw.)

	Centerweighted/	Multiple/	Spot
SLMM1	ON	OFF	OFF
SLMM2	OFF	OFF	ON

⑦SAOC (AF mode Sw.)

	C	A	S
SLMM1	ON	OFF	OFF
SLMM2	OFF	OFF	ON

■HELP CODE

■HELP codes stored in the camera can be read out using HIT system.
See page 28 of Repair Guide for details of HIT system set-up.

■Fig. 1

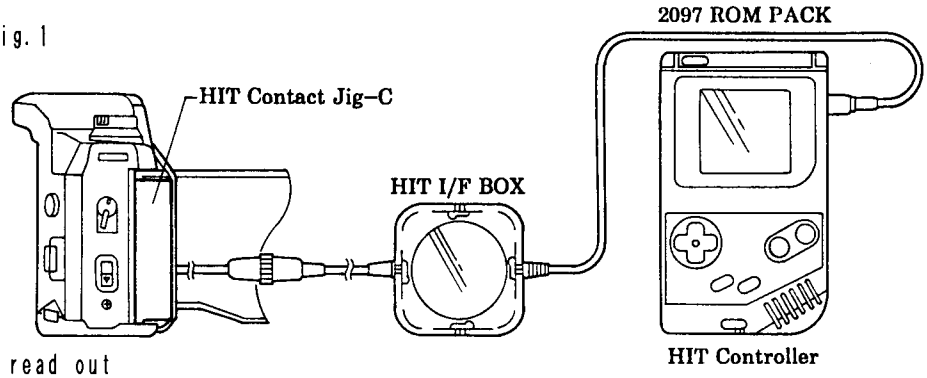

■HELP code read out

1. Set up the equipments and camera as in Fig. 1.
2. Select "ASSIST MODE" using Control Pad and press SELECT Button.
3. Select "HELP CODE" using Control Pad and press SELECT Button.
4. Press Shutter-Release Button partway down. HELP codes stored in memory appear.
   - To erase HELP code memory in the camera: Select "CLEAR" using Control Pad and press SELECT Button.
5. Select "MENU" using Control Pad and press SELECT Button. Displays are replaced with the assist mode menu.

■HELP code list

NO.	CAUSE	SYMPTOM
01	Poor SL2 attraction	Aperture control pulse is not output after aperture is released.
03	Aperture drive control failure	Aperture control pulses are less than required.
04	Aperture stop control failure	Aperture control pulses are more than required.
10	Mechanical charge failure (Defective gear and/or motor)	At mechanical charge, S3 doesn't turn ON within certain period of time.
11	Mechanical charge failure (Defective gear and/or motor)	SCP doesn't turn ON within certain period of time after M3 (charge motor) normal drive.
12	Shutter is not set.	X-contact doesn't turn OFF.
13	·No shutter operation ·No mirror up	X-contact doesn't turn ON
20	Rewind failure (Planetary gear doesn't changeover.)	SCAM doesn't changeover within certain period of time after M2 (winding motor) reverse drive start.
21	Rewind failure (Film broken or rewind fork diseangaged from film cartridge)	Sprocket stays still after M2 is driving.
22	Rewind failure (Film is stuck at rewind.)	M2 doesn't move during film rewind.
80	Poor CCD connection	————————

■Circuit diagram (FPC–A)
■回路図 (A フレキセット関係)

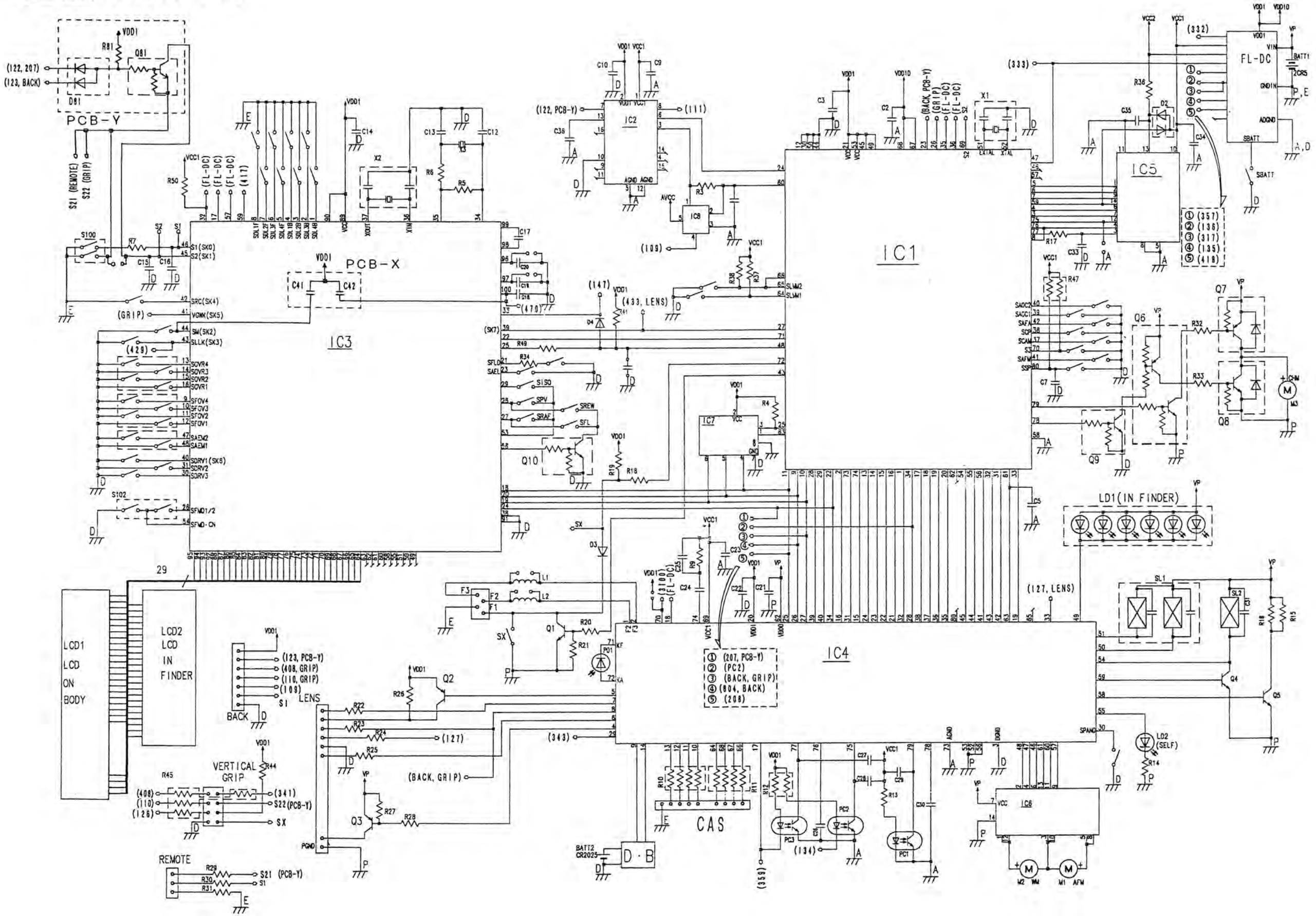

■Circuit diagram (Flash Converter PCB)
■回路図 (フラッシュコンバーター基板関係)

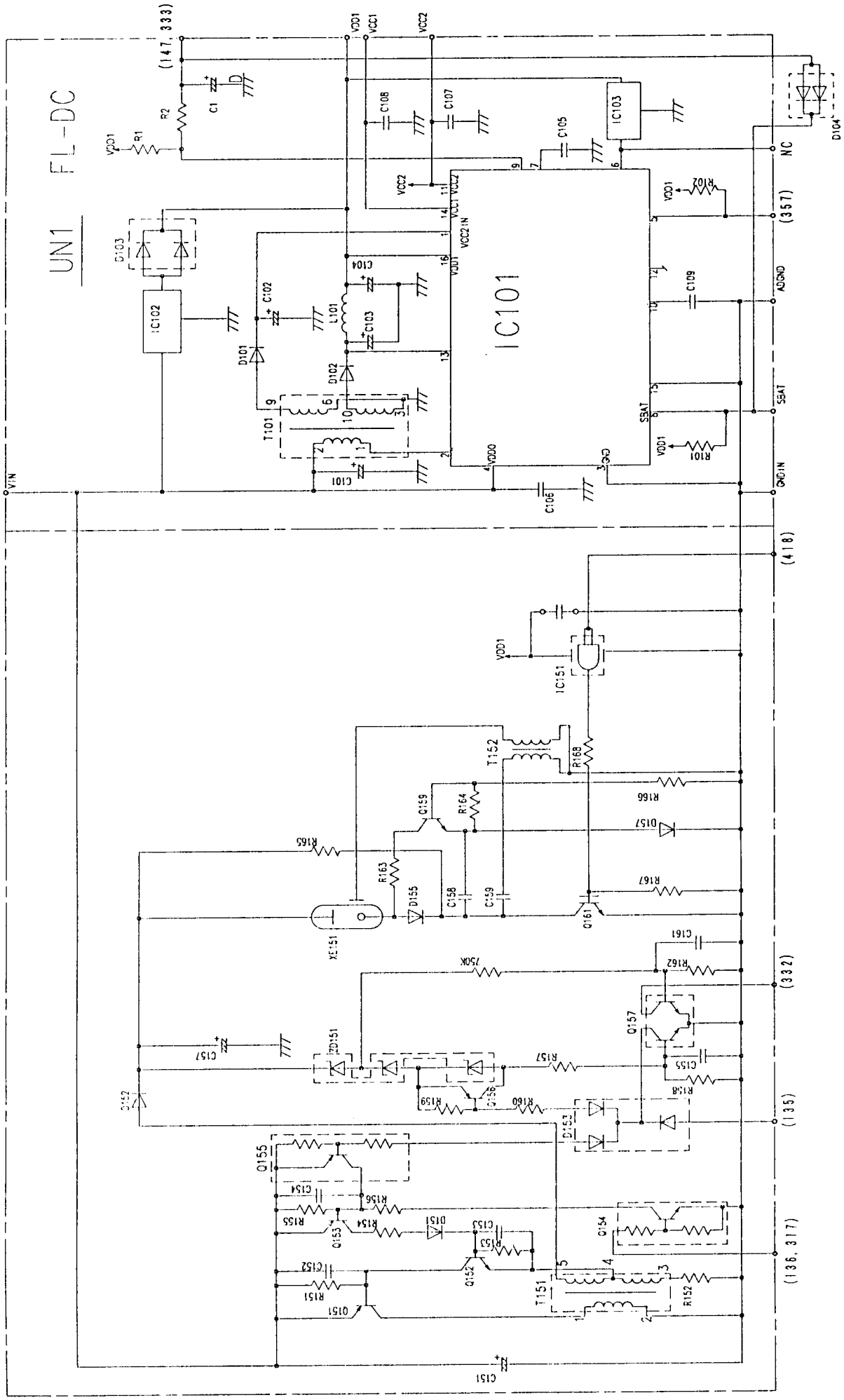

■Table of electrical elements (FPC–A Assy • FPC–K Assy)

FPC–A Assy						FPC–K Assy	
Symbol	Position	Symbol	Position	Symbol	Position	Symbol	Position
C2	3D	D2	2E	R16	3B	C12	4C
C3	4D	D3	3C	R17	3E	C13	4C
C4	3D	L1	3B	R18	3C	C14	3C
C5	3C	L2	3B	R19	3C	C15	4C
C7	4D	LD2	6B	R20	3C	C16	4C
C9	4E	Q1	3C	R21	3C	C17	3C
C10	4E	Q2	5D	R22	5C	C18	3C
C21	6D	Q3	6D	R23	5C	C19	3C
C22	5C	Q4	6C	R24	4C	C20	3C
C23	5C	Q5	3C	R25	5C	D4	4C
C24	6C	Q6	8D	R26	4C	Q10	4C
C25	6C	Q7	7D	R27	6D	R5	4C
C26	6C	Q8	7D	R28	6C	R6	4C
C27	6C	Q9	8D	R32	7D	R7	4C
C28	6C	R3	3D	R33	7D	R49	4C
C29	6C	R4	3D	R34	4B	X2	4C
C30	6C	R9	6C	R36	2E	X3	4C
C31	6C	R10	5C	R37	3D		
C33	3E	R11	6D	R38	3D		
C34	2E	R12	6C	R41	4C		
C35	2E	R13	3D	R47	4C		
C36	4E	R14	5C	R50	7D		
		R15	3B	X1	3C		

■Map of electrical elements

(FPC–A Assy; electrical–elements mounting side)

■素子配置図（A フレキセット：表面）

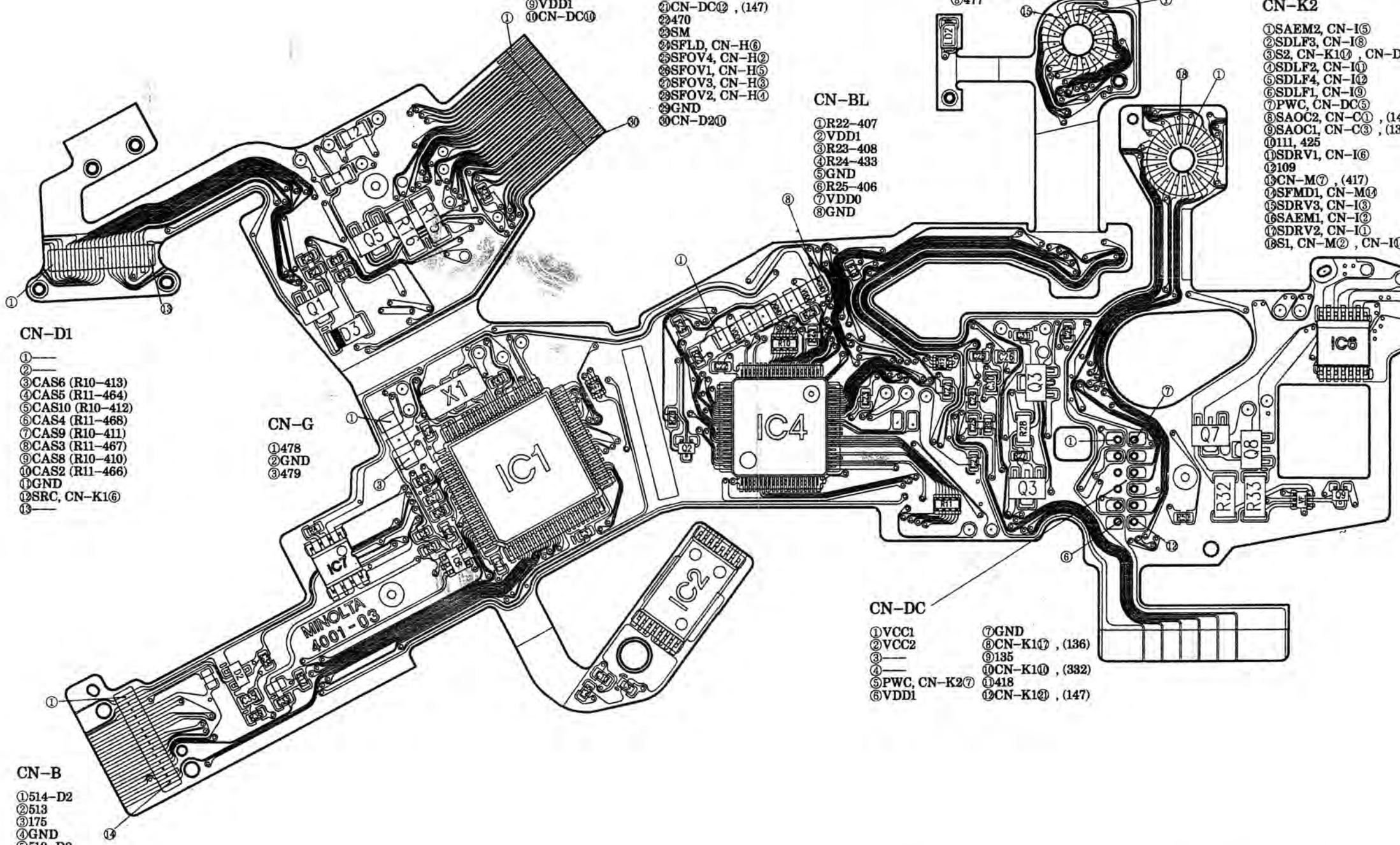

CN–K1

①——
②SOVR1, CN–H⑦
③SOVR2, CN–H⑧
④SOVR3, CN–H⑨
⑤SOVR4, CN–H⑩
⑥SRC, CN–D1⑫
⑦CN–D2④
⑧——
⑨VDD1
⑩CN–DC⑩
⑪SLMM1, CN–N③ , (164)
⑫SLMM2, CN–N② , (165)
⑬171
⑭S2, CN–K2③ , CN–D2⑧ , CN–I⑦
⑮112
⑯SLLK, (429)
⑰CN–DC⑧ , (136)
⑱127
⑲325
⑳GND
㉑CN–DC⑫ , (147)
㉒470
㉓SM
㉔SFLD, CN–H⑥
㉕SFOV4, CN–H②
㉖SFOV1, CN–H⑤
㉗SFOV3, CN–H③
㉘SFOV2, CN–H④
㉙GND
㉚CN–D2⑩

CN–M

①GND
②S1, CN–K2⑱ , CN–I⑭
③SAFA, (142)
④414
⑤409
⑥GND
⑦CN–K2⑬ , (417)
⑧477
⑨476
⑩SCAM, (137)
⑪GND
⑫SSP, (180)
⑬GND
⑭SFMD1, CN–K2⑭
⑮GND

CN–K2

①SAEM2, CN–I⑤
②SDLF3, CN–I⑧
③S2, CN–K1⑭ , CN–D2⑧ , CN–I⑦
④SDLF2, CN–I⑪
⑤SDLF4, CN–I⑫
⑥SDLF1, CN–I⑨
⑦PWC, CN–DC⑤
⑧SAOC2, CN–C① , (140)
⑨SAOC1, CN–C③ , (139)
⑩111, 425
⑪SDRV1, CN–I⑥
⑫109
⑬CN–M⑦ , (417)
⑭SFMD1, CN–M⑭
⑮SDRV3, CN–I③
⑯SAEM1, CN–I②
⑰SDRV2, CN–I①
⑱S1, CN–M② , CN–I⑭

CN–BL

①R22–407
②VDD1
③R23–408
④R24–433
⑤GND
⑥R25–406
⑦VDD0
⑧GND

CN–D1

①——
②——
③CAS6 (R10–413)
④CAS5 (R11–464)
⑤CAS10 (R10–412)
⑥CAS4 (R11–468)
⑦CAS9 (R10–411)
⑧CAS3 (R11–467)
⑨CAS8 (R10–410)
⑩CAS2 (R11–466)
⑪GND
⑫SRC, CN–K1⑥
⑬——

CN–G

①478
②GND
③479

CN–DC

①VCC1
②VCC2
③——
④——
⑤PWC, CN–K2⑦
⑥VDD1
⑦GND
⑧CN–K1⑰ , (136)
⑨135
⑩CN–K1⑩ , (332)
⑪418
⑫CN–K1㉑ , (147)

CN–B

①514–D2
②513
③175
④GND
⑤510–D2
⑥107
⑦GND
⑧103
⑨104
⑩GND
⑪176
⑫503–C33
⑬106
⑭105

コネクター部(CN)の3桁の数字は、ICの端子番号を表しています 例）1 23 IC–1 の 23 番端子 └端子 NO. └IC NO.	The numbers of three figures represent the terminal No. of IC. EX) (1 23) Terminal 23 of IC–1 └Terminal No. └IC No.

■Map of electrical elements (FPC–A Assy)
■素子配置図（A フレキセット：裏面）

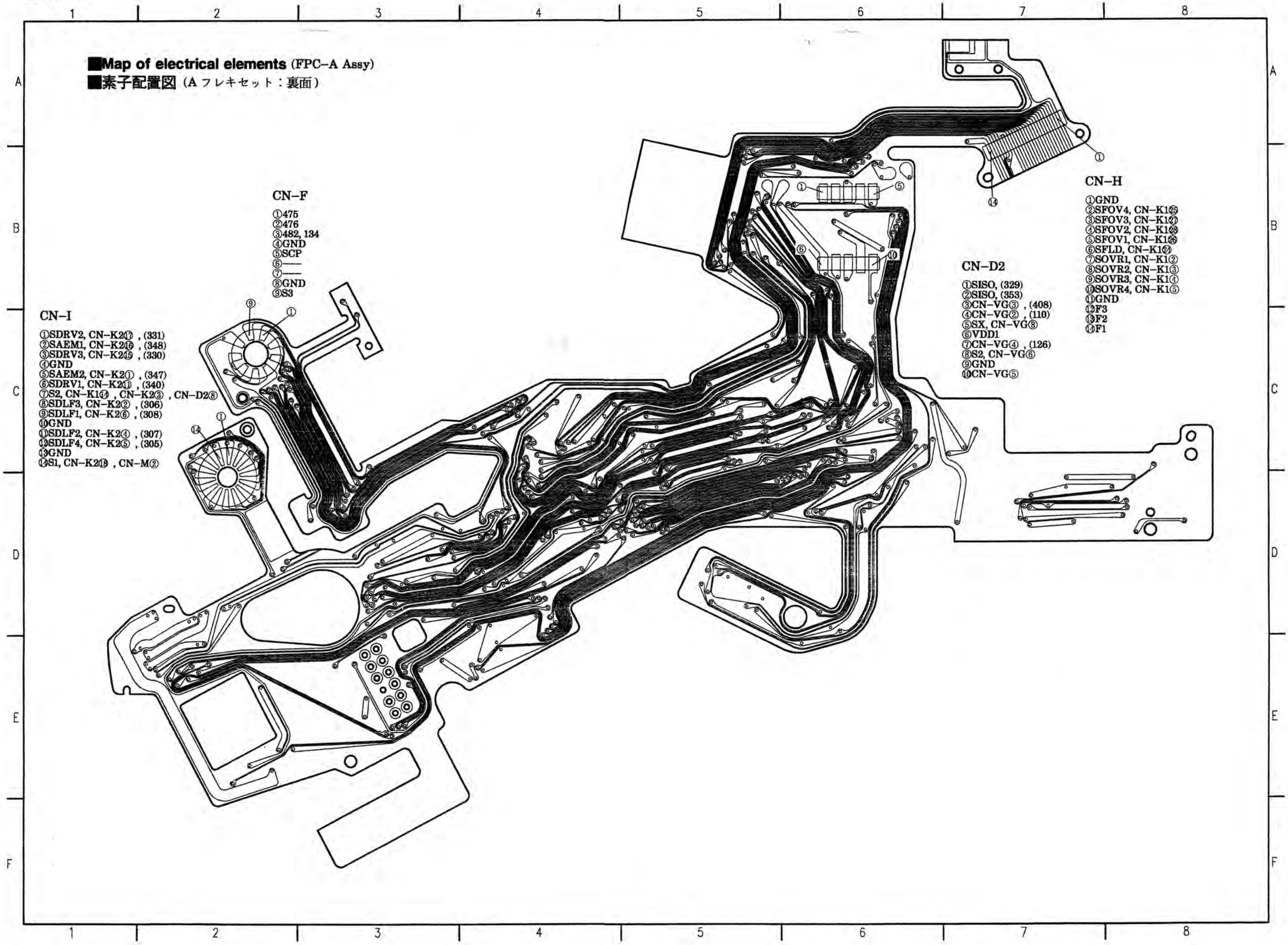

■Map of electrical elements (FPC–K Assy; electrical–elements mounting side)
■素子配置図（K フレキセット：表面）

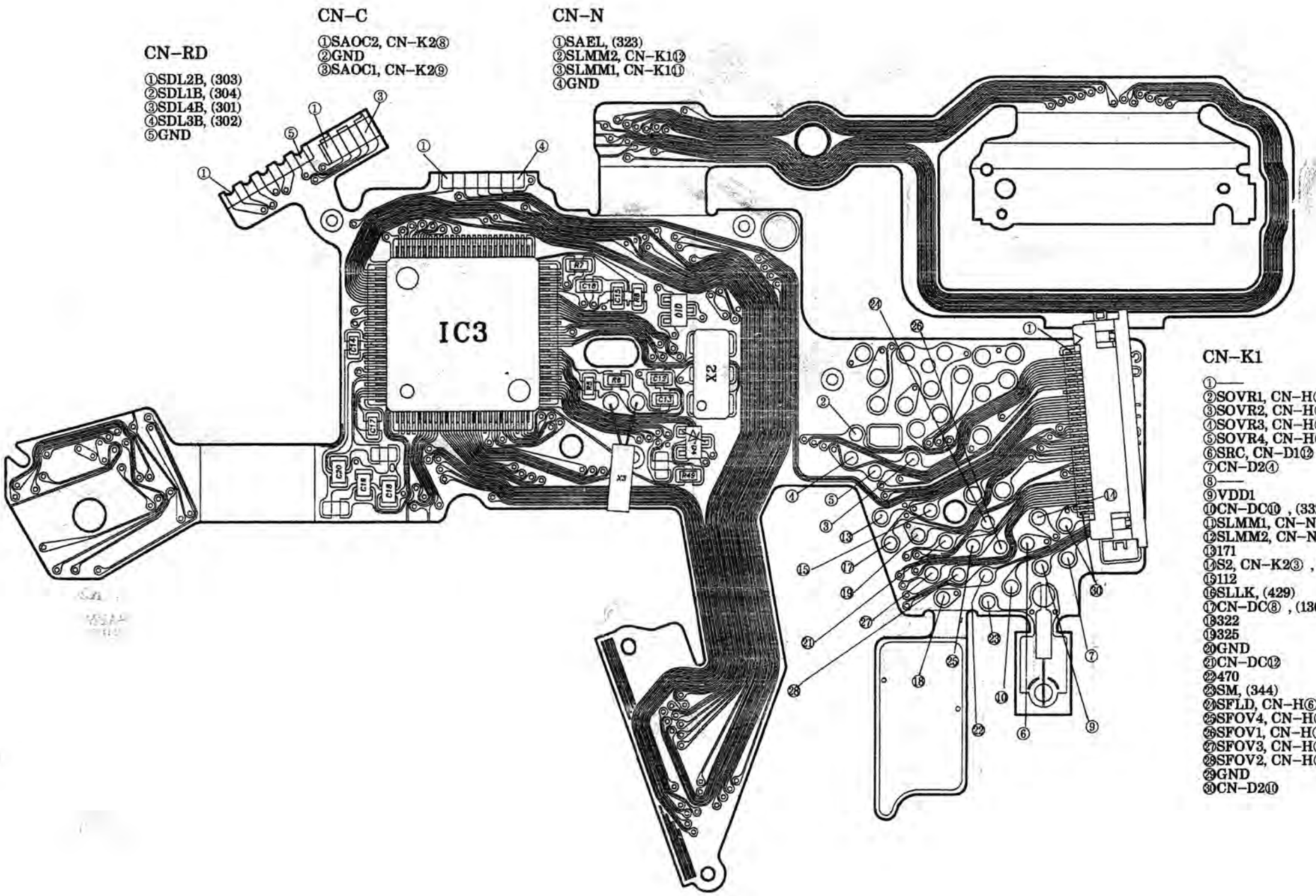

■Map of electrical elements (FPC–A Assy)
■素子配置図 (K フレキセット：裏面)

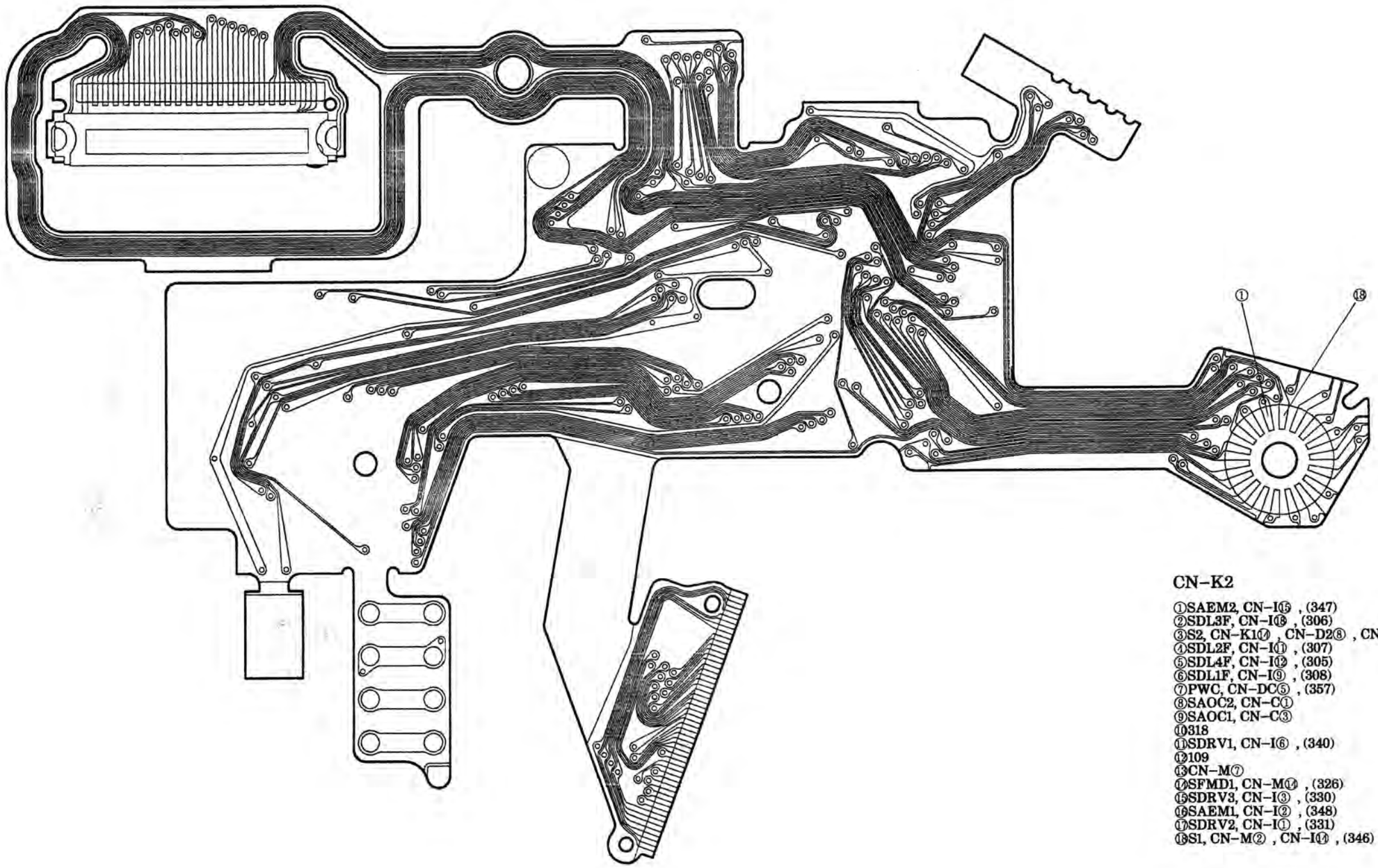

CN–K2

①SAEM2, CN–I⑮ , (347)
②SDL3F, CN–I⑱ , (306)
③S2, CN–K⑰ , CN–D2⑧ , CN–I⑦
④SDL2F, CN–I⑪ , (307)
⑤SDL4F, CN–I⑫ , (305)
⑥SDL1F, CN–I⑨ , (308)
⑦PWC, CN–DC⑤ , (357)
⑧SAOC2, CN–C①
⑨SAOC1, CN–C③
⑩318
⑪SDRV1, CN–I⑥ , (340)
⑫109
⑬CN–M⑦
⑭SFMD1, CN–M⑭ , (326)
⑮SDRV3, CN–I③ , (330)
⑯SAEM1, CN–I② , (348)
⑰SDRV2, CN–I① , (331)
⑱S1, CN–M② , CN–I⑭ , (346)

■Map of electrical elements (Flash Converter PCB Assy)
■素子配置図（フラッシュコンバーター基板セット）

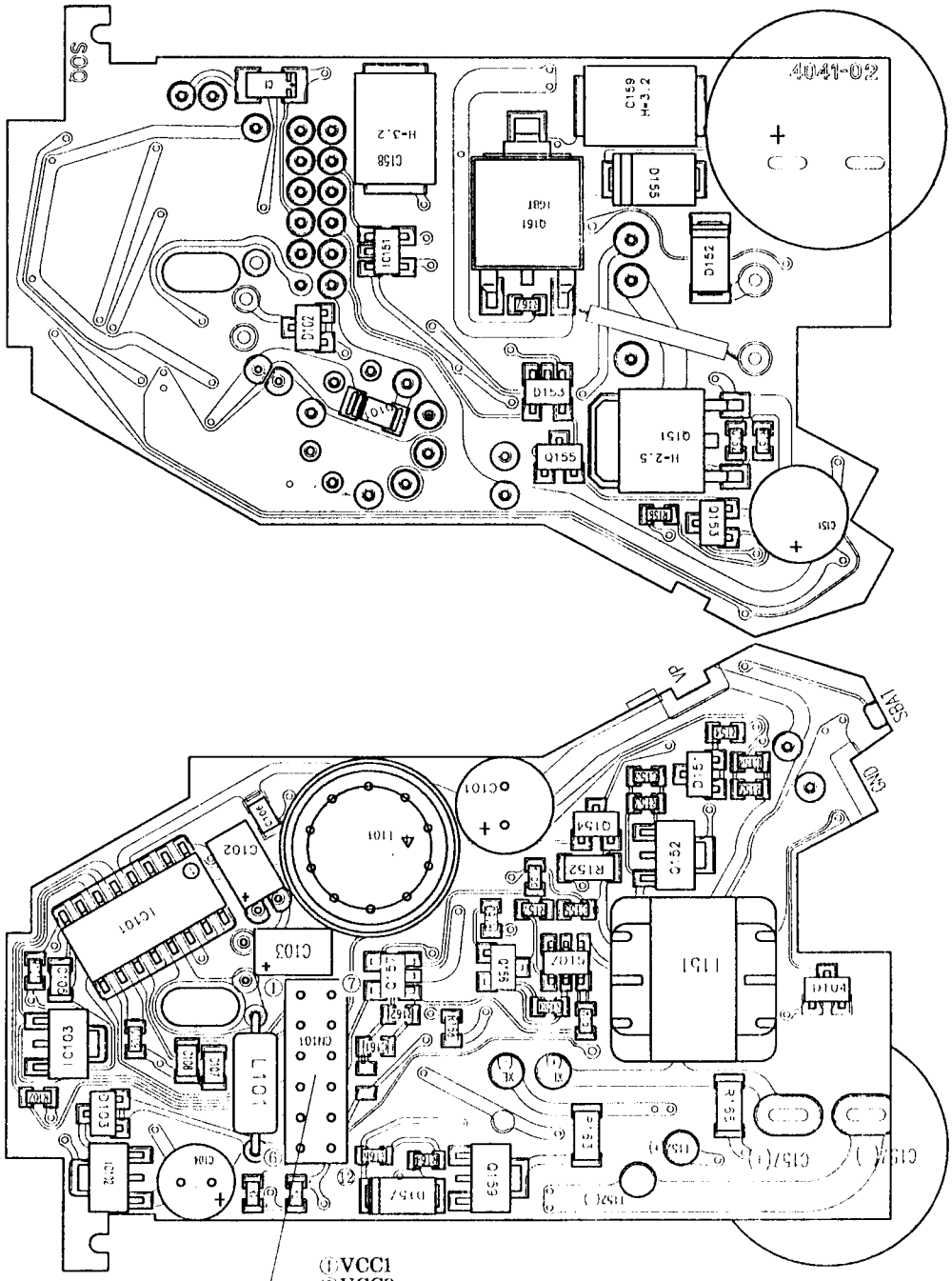

CN-DC
①VCC1
②VCC2
③---
④---
⑤PWC, CN-K2⑦
⑥VDD1
⑦GND
⑧CN-K1⑪
⑨135
⑩CN-K1⑩
⑪418
⑫CN-K1⑨

■Map of electrical elements (FPC–D Assy)
■素子配置図 (D フレキセット)

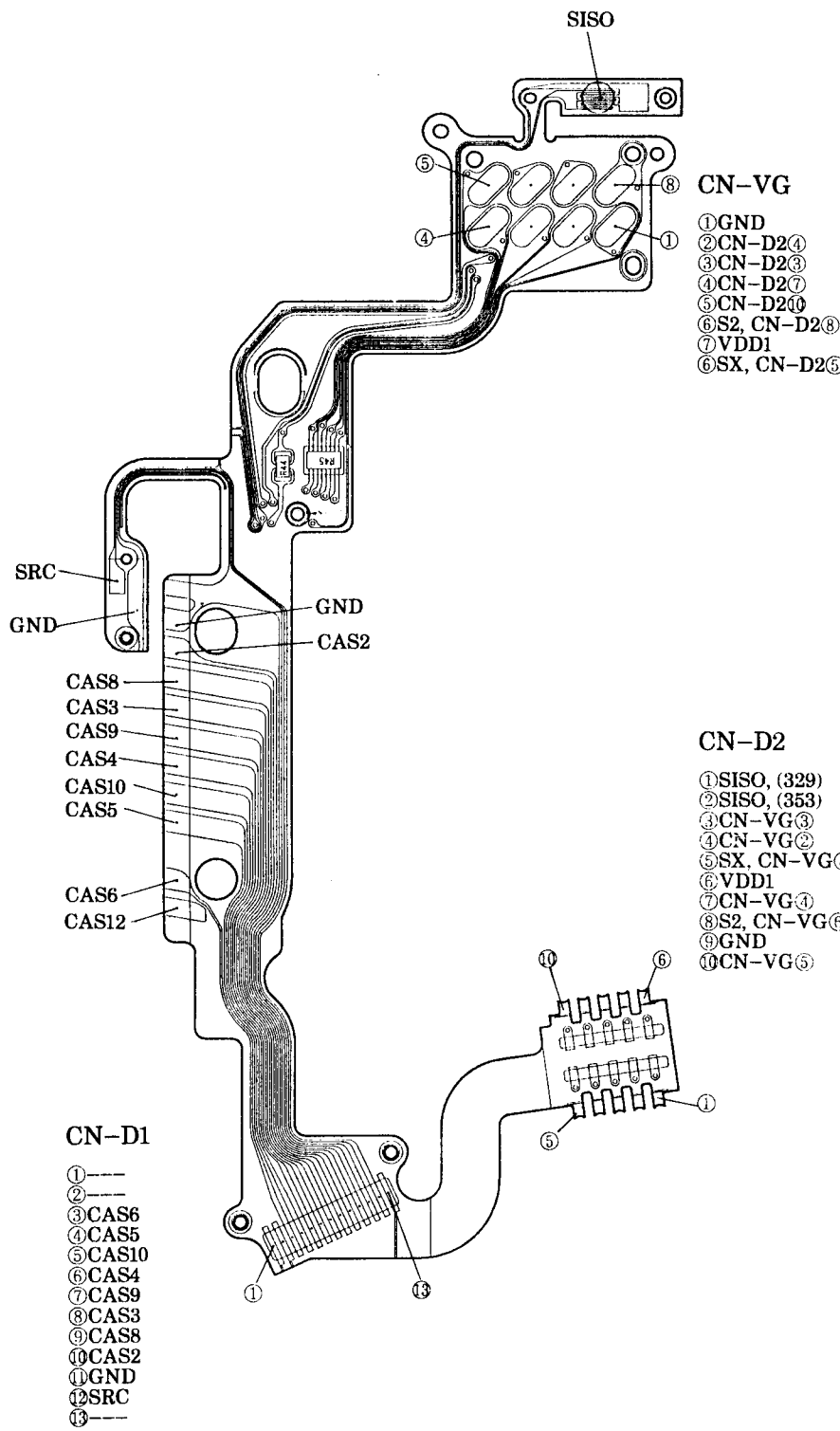

■Map of electrical elements (FPC–M Assy)
■素子配置図 (M フレキセット)

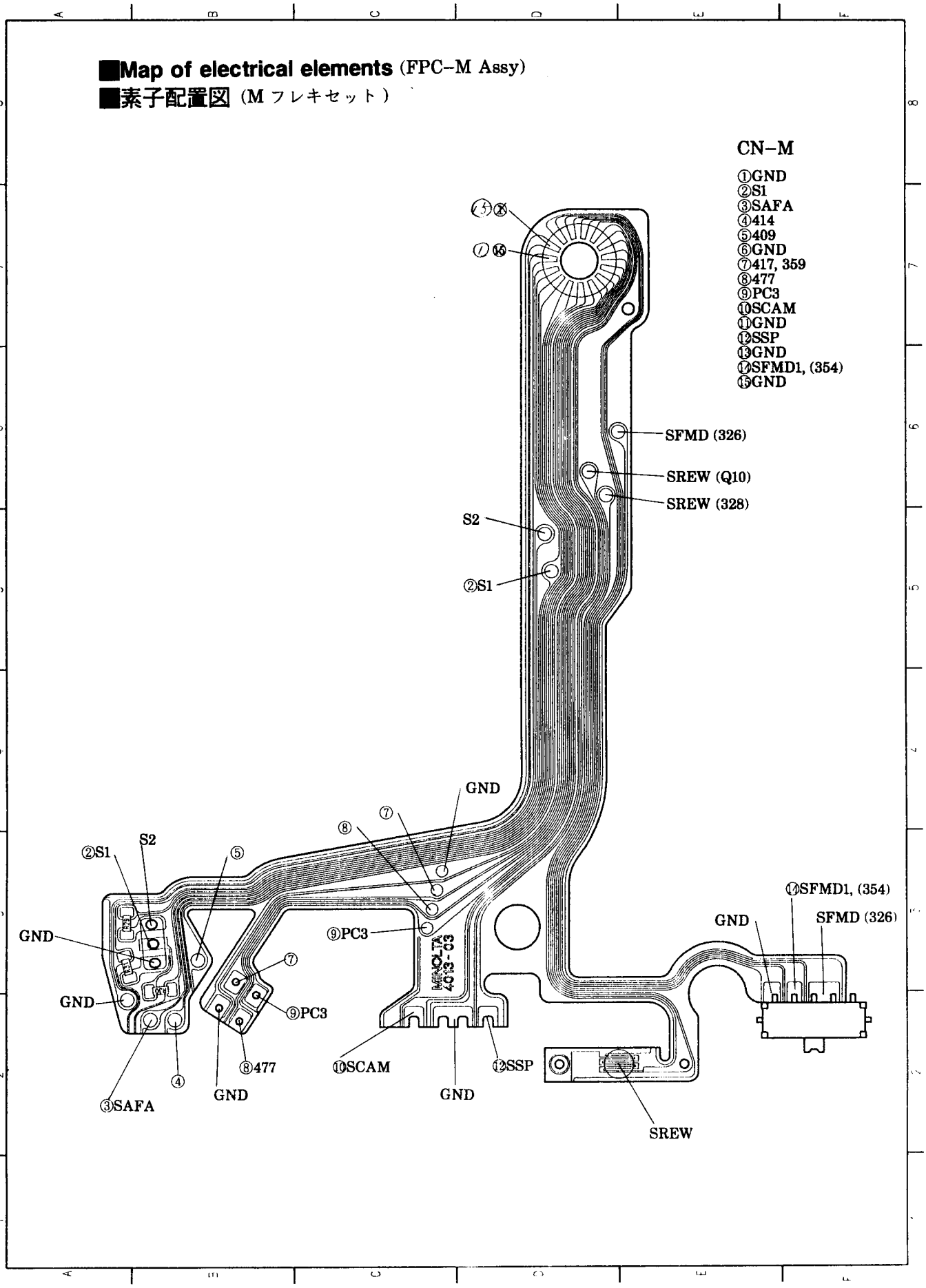

■Map of electrical elements (FPC–F)
■素子配置図 (F フレキ)

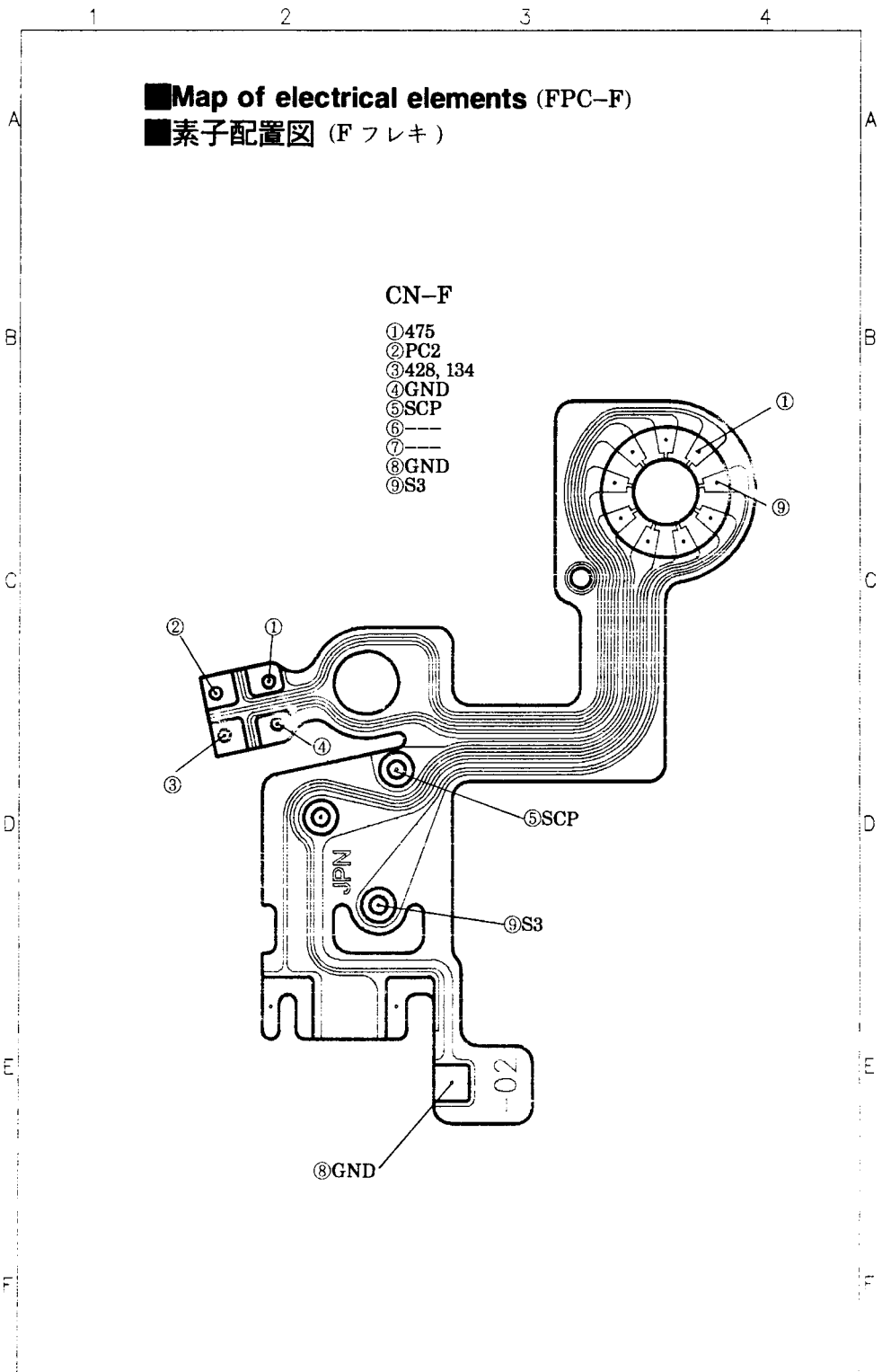

■Map of electrical elements (FPC-I)
■素子配置図 (I フレキ)

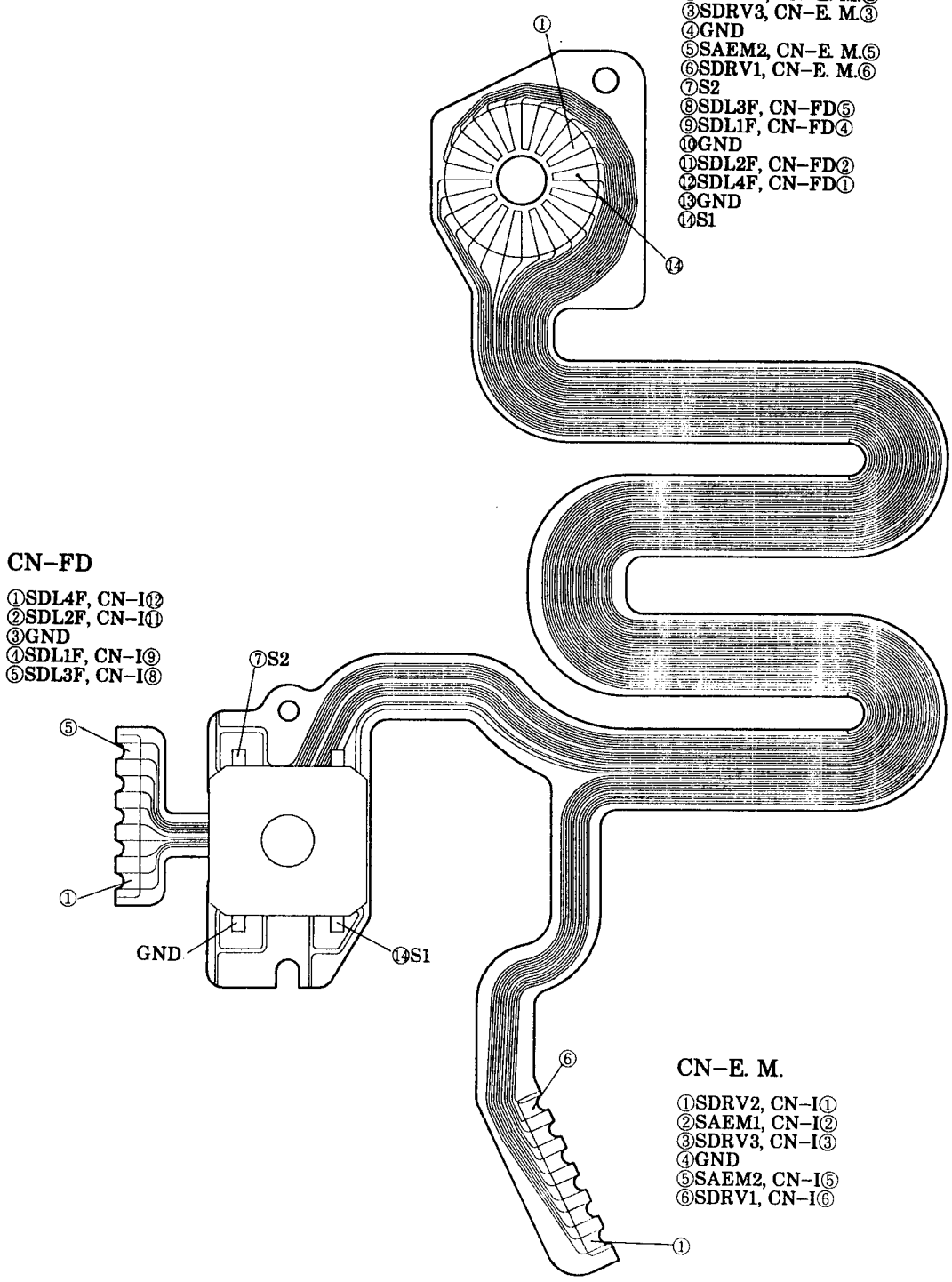

■Map of electrical elements (FPC–H)
■素子配置図 (H フレキ)

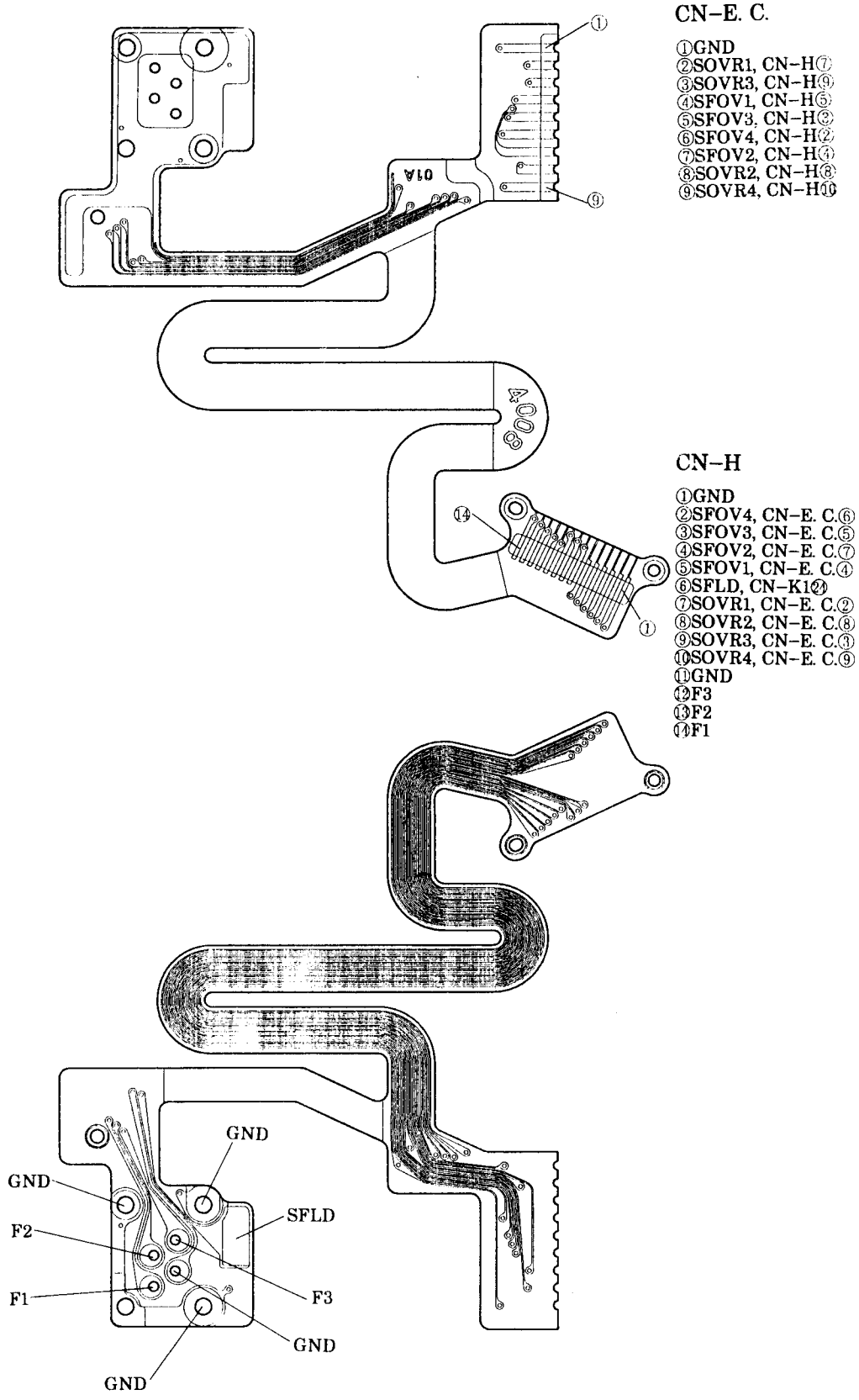

No. 2097-001 May. 1995

SERVICE MANUAL SUPPLEMENTARY INFORMATION

CODE No. 2097 Series

MODEL DYNAX 600si
MAXXUM 600si, 650si
α 507si

■Change of wiring accompanied with PCB-Y Assy modification (2097-0472-01 → 2097-0474-01).

■Related information
PML No. 10-2097-011

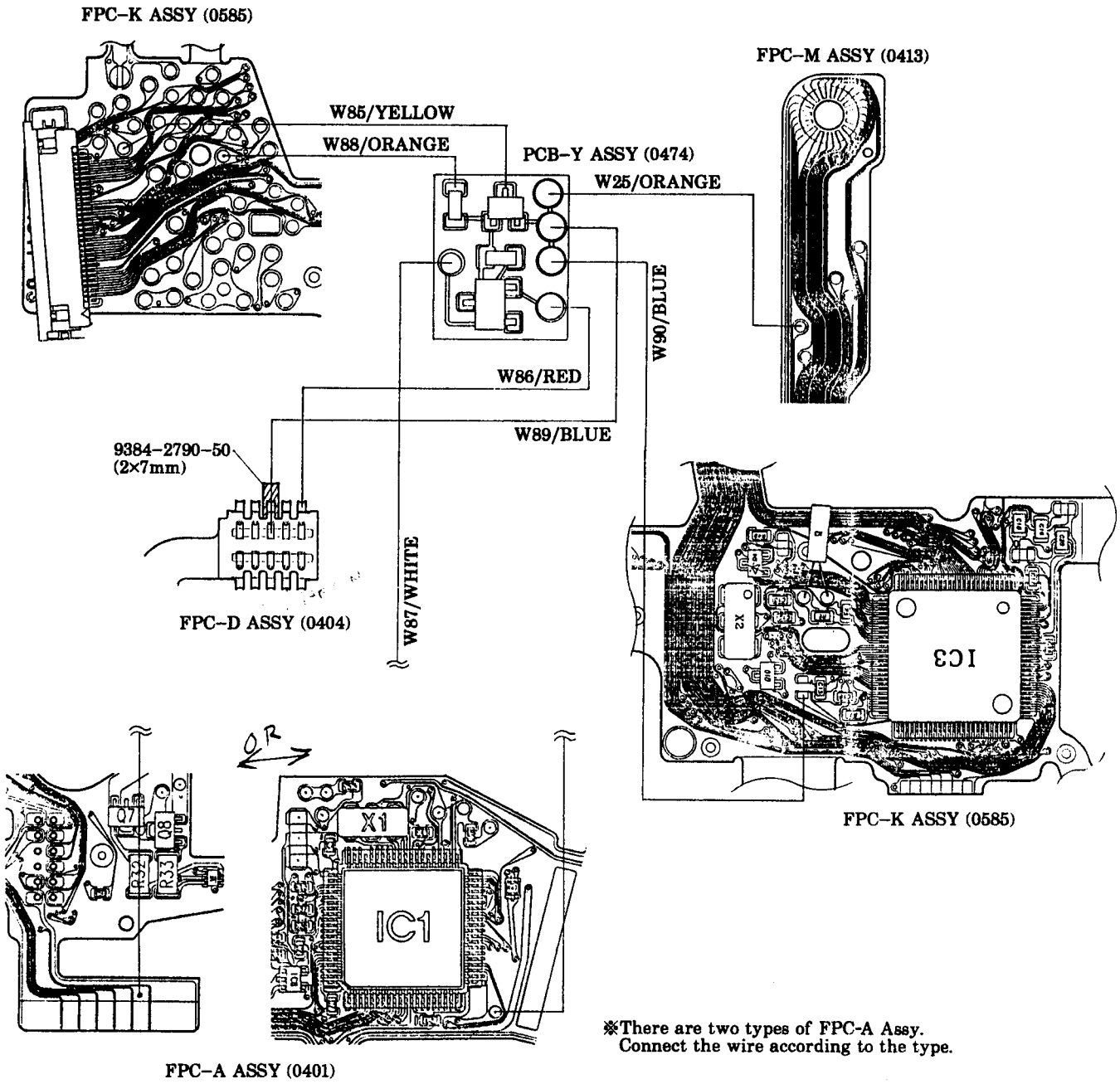

※There are two types of FPC-A Assy.
Connect the wire according to the type.

No. 2097-002 Jul. 1995

SERVICE MANUAL SUPPLEMENTARY INFORMATION

CODE No. 2097 Series

MODEL DYNAX 600si
MAXXUM 600si, 650si
α 507si

■Combination of FPC-A Assy and PCB-X Assy, and wiring according to type of FPC-A Assy

■Combination

• See WIRING DIAGRAM 2 (2097) in Parts List.

	Type-1	Type-2
FPC-A Assy (2097-0401-01)	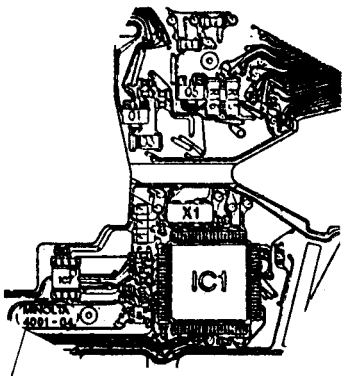	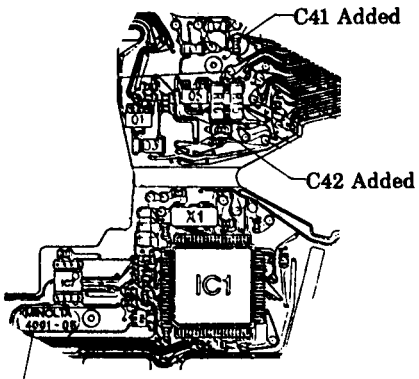
PCB-X Assy (2097-0428-01)	Required	Not required

※Wiring:

W81, 82, 83; Discontinued

W12, 16, 19, 20; Changed

■Related information

Parts Modification List No. 10-2097-019

No. 2097-003 Jul. 1995

SERVICE MANUAL SUPPLEMENTARY INFORMATION

CODE No. 2097 Series

MODEL DYNAX 600si
MAXXUM 600si, 650si
α 507si

■Combination of FPC-A Assy, PCB-Y Assy and R8 (accompanied with FPC-A Assy modification; 2097-0401-01 → -02)

■Combination

• See WIRING DIAGRAM 2 (2097) in Parts List.

	-01	-02
FPC-A Assy (2097-0401)	IC-1 6473032F16 or 6433032--- K01	IC-1 6433032--- K02
FPC-Y Assy (2097-0474)	Required	Not required
R8 on FPC-K assy (9431-1026-67) ※R8 is on or not on the FPC-K Assy for service parts. Check existence of R8 before replacement.	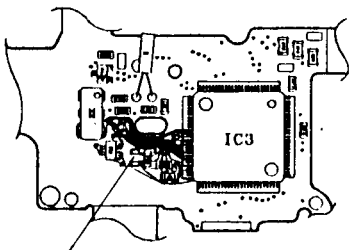 R8 ; Not required ※Remove R8 if exists.	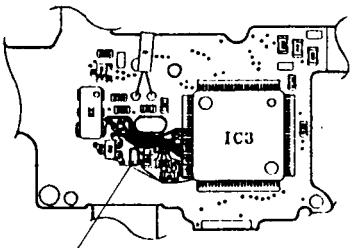 R8 ; Required ※Install R8 when not exist.

※Wiring:

W85, 86, 87, 88, 89, 90; Discontinued

W25: Changed

■Related information

Parts Modification List No. 10-2097-027